75-595
5H1053110000

August, 2020

INSTALLATION INSTRUCTIONS

GPS Needlepoint Bipolar Ionization Auto Cleaning System

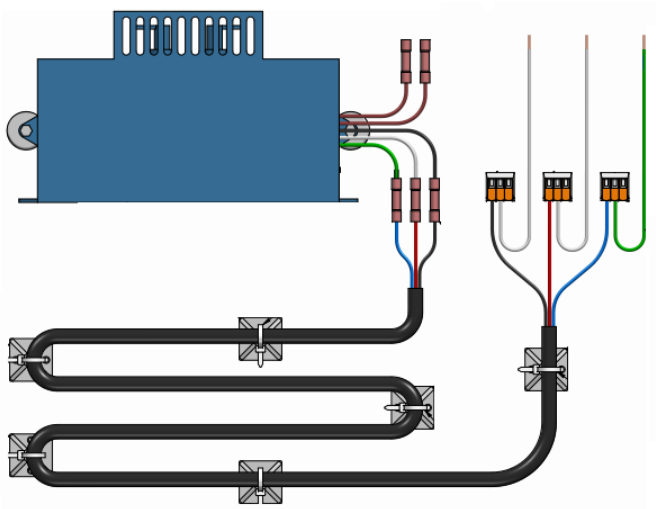

WARNING

1. Disconnect power supply before making wiring connections to prevent electrical shock and equipment damage.
2. All units must be wired strictly in accordance with wiring diagram furnished with the unit. Any wiring different from the wiring diagram could result in a hazard to persons and property.
3. All wiring must be done with a wiring material having a temperature rating of at least 105°C.
4. Never touch brushes while in operation. Shock may occur.

IMPORTANT

The use of this manual is specifically intended for a qualified installation and service agency. All installation and service of these units must be performed by a qualified installation and service agency. Modine manuals may contain excerpts from component supplier literature adapted for Modine products. Any accompanying component supplier literature is for general information.

Application

The GPS-FC24-AC is an autocleaning air purifier that can be mounted in HVAC equipment requiring a compact design.

The included magnets allow for simple installation on, or near, the supply air fan without the need to cut or drill.

The GPS-FC24-AC requires no maintenance nor periodic replacement parts.

These instructions are for use in the following Airedale and Modine School Products:

Airedale ClassMate®

Airedale SchoolMate®

Airedale Sentinel®

Airedale Varsity®

Modine Valedictorian®

Components

- GPS-FC24-AC Auto Cleaning Ionization System with wire harness (attached)
- Rare earth magnets (2)
- Machine screws and nuts for mounting magnets (2 each)
- Zip Tie (6)
- Zip Tie Base (6)

Installation

Before you start, confirm the contents of your shipment match the components listed above. If any components are missing, please call 1-800-828-4328.

Remove ionization system from the box and separate the magnets. Adhere one magnet to a metal surface, while installing the other magnet to the flat face of the ionizer with included screw and nut. (see figure 1.1)

Install second magnet and ensure both are securely fastened as shown in figure 1.1)

THIS MANUAL IS THE PROPERTY OF THE OWNER.
PLEASE BE SURE TO LEAVE IT WITH THE OWNER WHEN YOU LEAVE THE JOB.

INSTALLATION – GPS NPBI Auto Cleaning System

FIGURE 1.1

⚠ Turn off all power to the HVAC unit.

Open the classroom unit, removing panels where necessary to expose the supply air fan.

Take a moment to determine where you will locate the ionizer.

In the Airedale ClassMate®, Airedale SchoolMate® and Airedale Sentinel® (model UVD) units, we recommend mounting on the blower housing on the side opposite the motor, in approximately the 5 o'clock position. (see figure 1.2)

FIGURE 1.2

In the Airedale Sentinel® (model UVV), we recommend mounting along the front of the top panel either in the center (preferred) or corner, away from piping terminations. (see figure 1.3)

FIGURE 1.3

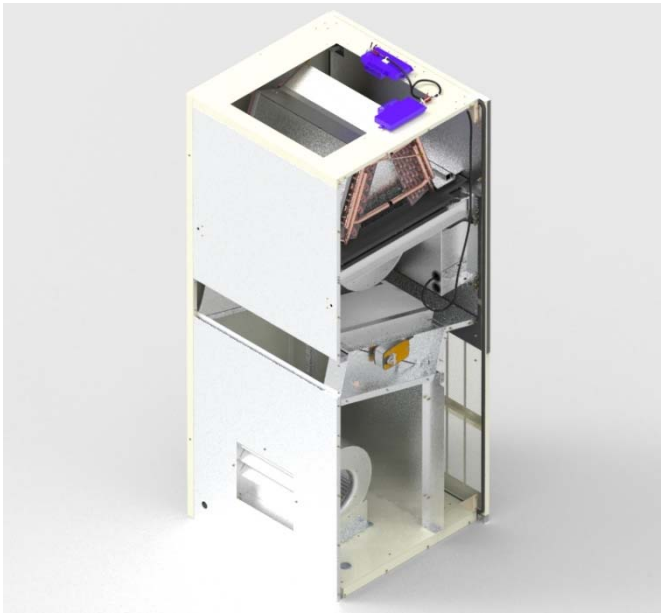

In the Airedale Varsity® and Modine Valedictorian® models, we recommend mounting behind and between the fans, with the brushes pointing toward the front of the unit (see figure 1.4)

FIGURE 1.4

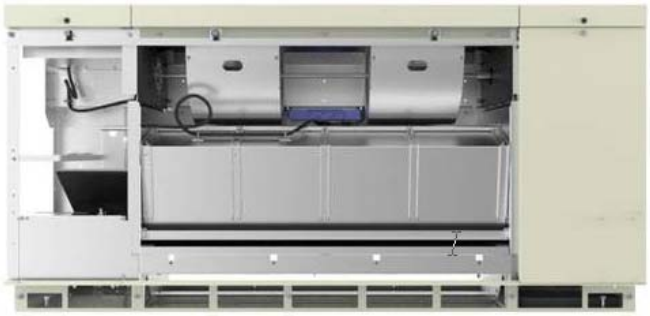

⚠ Verify the carbon fiber emitters have a 2" clearance from wires or other metal objects.

Make sure the ionizer unit is positioned so it obstructs as little airflow as possible.

Wiring

Confirm the power is off prior to wiring. Follow all local and national electrical and building codes.

The GPS-FC24-AC will self-adjust to voltages from 24VAC to 240VAC.

Connect the power wires as follows:

Black	24 VAC to terminal 502
White	Neutral or L2 to terminal 500
Green	Ground
Browns	Dry Contacts/BAS Alarm

Wire Tracing

Trace wires using zip ties and bases as described below, based on the Airedale or Modine School product you are installing in.

Airedale ClassMate® (Model CMD/CMP/CMS) & Airedale SchoolMate® (Model SMG/SMW)

Figure 2.1

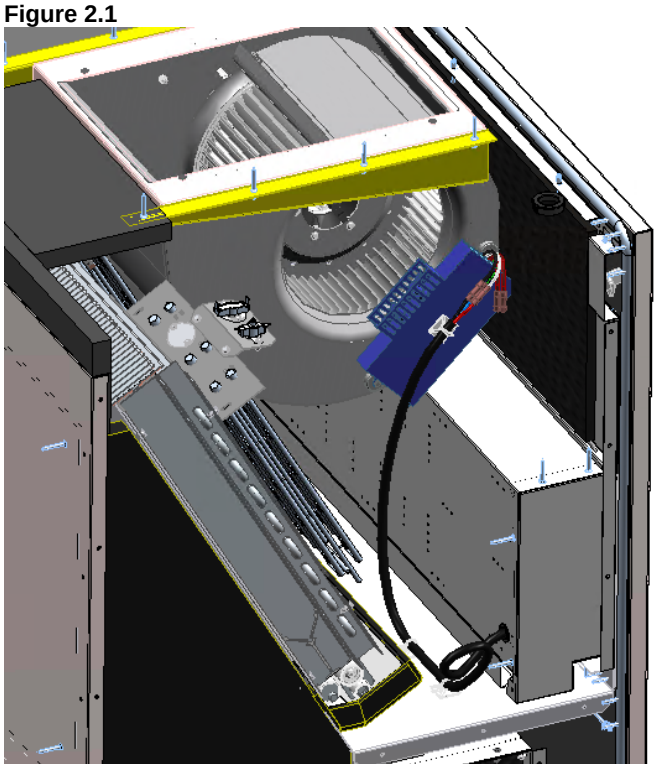

Mount the ionizer with the brushes overlapping the left side blower inlet when facing the unit from the front. The device should be rotated between 30 – 45° in the final mounting position. Use the magnets provided to secure the device.

Wiring for the ionizer should be secured back upon itself and then guided down to the control panel shelf. These 2x anchor points will keep the wire away from possible electric heat banks, fan impeller, and hinged control panel.
The final anchor point should be right before entering the control panel creating an 8” loop of wire allowing the panel to hinge downward.

Due to the variability of options this unit can come with, terminal strip locations (502) / (500) / (GND) will all exist but could potentially be full. The ionizer was shipped with a 3 way splice connection for each above listed terminal.

If no open terminal location is available, remove a wire from the needed terminal, and connect it into the 3 way splice connector. Land the connection wire into the now vacated terminal on the terminal block.

If there are available terminal locations, the splice connector is not needed to be used and the wire can terminate at the terminal right away.

Airedale Sentinel® (Model UVV and UVF)

The mounting of the ionizer on this style of unit is subject to install conditions.

The preferred locations are on top of the top panel over the coil section of the unit. This may not be accessible if there is ductwork mounted very close to the leaving air profile.

Figure 2.2

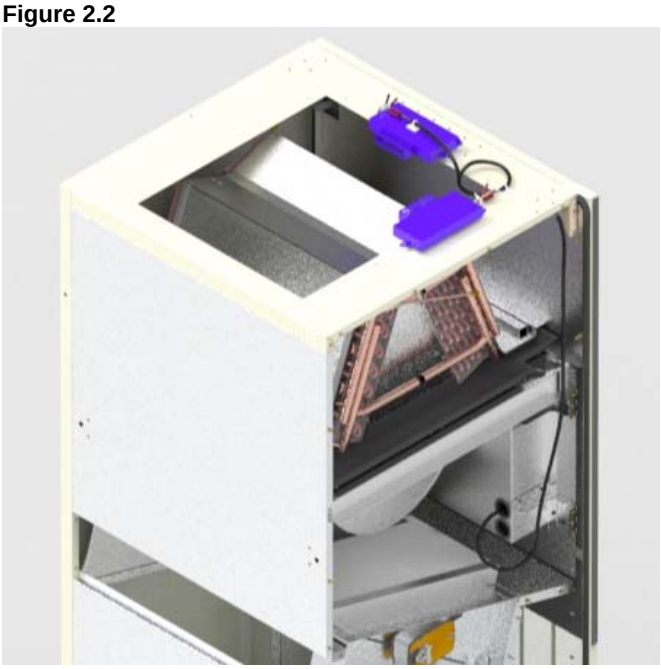

If the top panel is accessible, the preferred location would be centered behind the water pipes. This can be accessed from the inside of the unit and the magnets will secure the device to this position.

If, for any reason this is not available, the left side is also a preferred mounting location overhanging the discharge air with the brushes.

In the case both positions are unusable, the foam underneath the first described position can be removed and the device can be mounted under the top panel rather than above the panel. The last recommended option would be to move the magnets to the base mounting tabs and secure the device horizontally inside the duct above the leaving air opening.

Wiring for the ionizer should be routed on the left side of the unit when facing the front. (figure 2.3)The first anchor point should be to the coil blanking gusset allowing the wiring to guide down the left side of the unit. There is removed material for wiring along the front left side wall of the coil shelf.

Figure 2.3

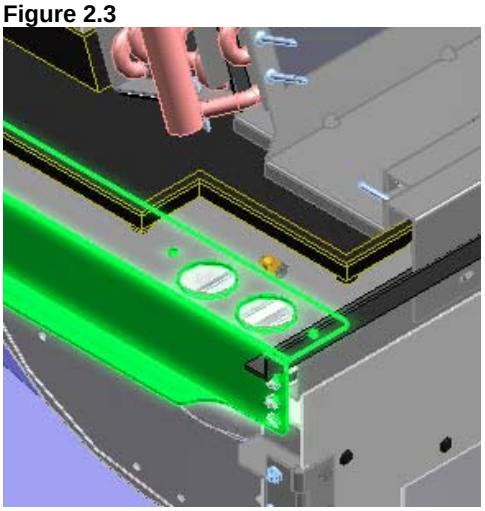

The final anchor point should be on the left hand liner above the damper section. Allow for an 8” loop to be between the last anchor point and the entrance to the control panel.
Due to the variability of options this unit can come with, terminal strip locations (502) / (500) / (GND) will all exist but could potentially be full. The ionizer was shipped with a 3 way splice connection for each above listed terminal.

If no open terminal location is available, remove a wire from the needed terminal, and connect it into the 3 way splice connector. Land the connection wire into the now vacated terminal on the terminal block.

If there are available terminal locations, the splice connector is not needed to be used and the wire can terminate at the terminal right away.

Airedale Sentinel® (Model UVD)

Mount the Ionizer with the brushes overlapping the right side blower inlet when facing the unit from the front. The device should be vertical, without rotation, when it is in the final mounting position. Use the magnets provided to secure the device.

Wiring for the ionizer should be anchored to the bottom of the blower housing as it crosses the unit towards the left and is anchored on the piping support bracket.

The final anchor point should be on the front of the piping support bracket near to the control panel inlet. Allow for an 8” loop to be between the last anchor point and the entrance to the control panel.

Due to the variability of options this unit can come with, terminal strip locations (502) / (500) / (GND) will all exist but could potentially be full. The ionizer was shipped with a 3 way splice connection for each above listed terminal.

If no open terminal location is available, remove a wire from the needed terminal, and connect it into the 3 way splice connector. Land the connection wire into the now vacated terminal on the terminal block.

If there are available terminal locations, the splice connector is not needed to be used and the wire can terminate at the terminal right away.

Airedale Varsity® (Model ZFF/ZSF/ZFV/ZSV)
Modine Valedictorian® (Model VFF/VSF/VFV/VSV)

Figure 2.4

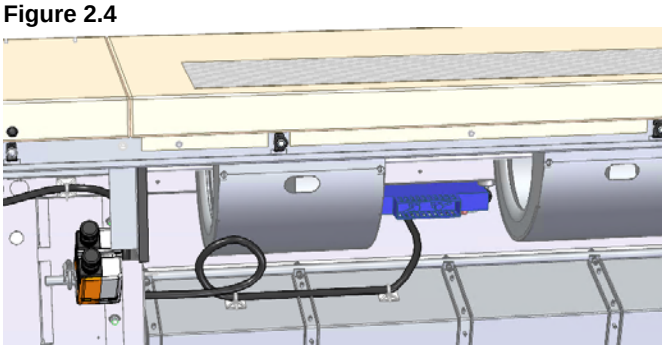

Mount the Ionizer centered between the first and second blower. Based on size, there could be up to 4x blowers.

The device should mount using the magnets provided, to the piping / wiring chase. The device will look horizontal as positioned above.

Secure the wiring for the ionizer to the body of the device before anchoring to the Face & Bypass damper / Coil Blank-off (valve control). With Face & Bypass, leave 2” of wire slack for the damper to actuate fully.

Figure 2.5

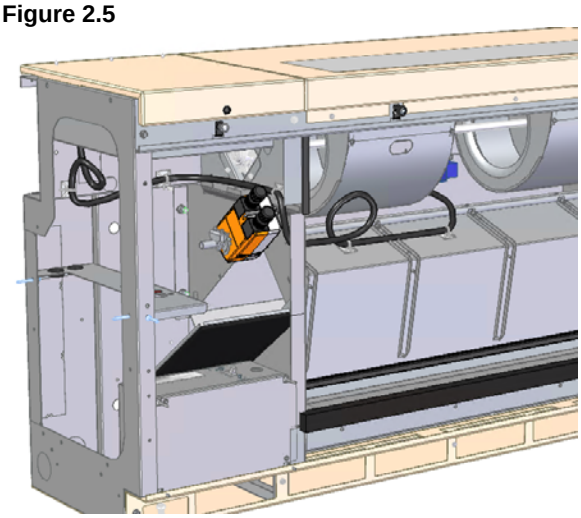

The wiring should be secured on the Damper again near the left coil side mounting panel. Create a 5” loop and anchor on the inside of the mounting panel. Wiring should follow the blower left side panel to the piping / wiring chase and be secured again.

The final anchor point should be below the entry into the control panel. Between the control panel and this last anchor, leave 8” wire loop for the panel to be raised.

Due to the variability of options this unit can come with, terminal strip locations (502) / (500) / (GND) will all exist but could potentially be full. The ionizer was shipped with a 3 way splice connection for each above listed terminal.

If no open terminal location is available, remove a wire from the needed terminal, and connect it into the 3 way splice connector. Land the connection wire into the now vacated terminal on the terminal block.

If there are available terminal locations, the splice connector is not needed to be used and the wire can terminate at the terminal right away.

NOTE: For ducted units, to maximize ions in the occupied space, the ionizer can be installed inside the duct immediately before the soffit leading into the space. Extend wire as needed to reach the control panel as described above.

Interlocking with Fan Control

The above instructions will run the ionizer any time the unit is powered. If preferred, the ionizer can be interlocked with the fan. To do so, crimp the provided fork connector onto the 502 wire and replace the 502 label with the 520 label on the wire.

Locate the F1/K1 contactor and the 520 wire which should be terminated on the A1/A2 coil contact. Loosen screw, remove wire, cut the fork connector off of the 520 wire, strip the wire and land in 3-way splice connector that came with the ionizer kit.

Land newly labeled 520 wire with fork connector on the A1/A2 coil contact.

NOTE: If a status for the device is required, connect to the 2 provided butt splices on the brown wire to the desired status input.

Replace all panels, close unit and restore power.

NOTE: Once powered, the ionizer unit initiates an internal check of all systems. If the auto cleaning wiper blade is not in the “home” position, it will move to the home position in series with the airflow.

Leave these instructions, and component literature with the customer

Modine Manufacturing Company has a continuous product improvement program,
and therefore reserves the right to change design and specifications without notice.

© Modine Manufacturing 2020