MODINE

6-443.1

November, 1997

WIRING DIAGRAMS

Models PAE/BAE

gas-fired unit heaters manufactured after March 1991

(for units manufactured between August 1984 and September 1986, see bulletin 6-441)

DIAGRAM SELECTION

Diagrams are provided for both single- and three-phase circuits, and are readily identified in the Selection Table on the following page. The Selection Table enables easy selection of the correct wiring diagram after the electrical components of the unit heater have been determined. The control codes are listed to aid in locating the correct diagram.

DIAGRAM INTERCHANGEABILITY

The following gas-fired unit heater wiring diagrams are for either 115-volt, 60 Hertz, single-phase power, or for 230-volt, 60 Hertz, three-phase electrical service.

The 115v/60 Hz/1ϕ diagrams may also be utilized for 230v/60 Hz/1ϕ by substituting 230-volt components for the 115-volt shown.

The 230v/60 Hz/3ϕ diagrams may be modified to 460v/60 Hz/3ϕ by adding a 460v to 230v step down transformer and wiring the unit as shown in the wiring "inset" on all 3-phase wiring diagrams.

NOTE: As indicated in every diagram, all wiring must comply with the National Electrical Code and all local codes. All components must agree with their respective power source.

ABBREVIATIONS AND SYMBOLS

To facilitate interpretation and enable simplification the abbreviations and symbols have been selected as recommended by ANSI (American National Standards Institute) and NEMA (National Electrical Manufacturers Association) standards.

XFMR or TR	Transformer
V	Volts
Hz	Cycle or Hertz
ϕ	Phase
LC	Limit Control
THERM or TH	Thermostat
MV	Main Valve
PV	Pilot Valve
SO	Shut Off
RC	Relay Contact or Coil
G	Ground
H	Hot
SW	Switch
EPS	Electric Pilot Switch
HI	High
Lo	Low
C	Common
"J" Box	Junction Box
H1, H2, etc.	Transformer Primary Terminals
SUM	Summer Contact (Summer/Winter Switch)
WIN	Winter Contact (Summer/Winter Switch)
S-W	Summer/Winter Switch
O.L.C.	Overload Contact
C.S.	Power Venter Centrifugal Switch
FT_C	Fan Timer Contact
SPDT	Single-Pole Double-Throw Switch
VA	Volt-Ampere
W	Watts

WIRE COLOR CODING

BK	Black
BL	Blue
R	Red
W	White
Y	Yellow
X1, X2, etc.	Transformer Secondary Terminals
L1, L2, etc.	Electric Load Terminals
T1, T2, etc.	Starter or Motor Terminals

POWER REQUIREMENTS (AMPS) — PAE MODELS

Power Supply	PAE 30, 50	PAE 75, 100	PAE 125	PAE 145, 175, 200, 225	PAE 250, 300	PAE 350, 400
115v/1ϕ	1.3	2.3	2.7	3.1	5.7	9.1
230v/1ϕ	.6	1.4	1.4	1.7	2.8	4.6
200v/3ϕ	—	—	—	—	2.3	3.9
230v/3ϕ	—	—	—	—	2.4	3.9
460v/3ϕ	—	—	—	—	1.2	1.95

POWER REQUIREMENTS (AMPS) — BAE MODELS

Power Supply	HP	BAE 50	BAE 75	BAE 100	BAE 125	BAE 145	BAE 175	BAE 200	BAE 225	BAE 250	BAE 300	BAE 350	BAE 400
115v/1ϕ	¼	5.7	5.7	5.7	5.7	—	5.7	—	—	—	—	—	—
230v/1ϕ	¼	2.9	2.9	2.9	2.9	—	2.9	—	—	—	—	—	—
200v/3ϕ	¼	1.8	1.8	1.8	1.8	—	1.8	—	—	—	—	—	—
230v/3ϕ	¼	1.6	1.6	1.6	1.6	—	1.6	—	—	—	—	—	—
460v/3ϕ	¼	.8	.8	.8	.8	—	.8	—	—	—	—	—	—
115v/1ϕ	⅓	4.9	4.9	4.9	4.9	4.9	4.9	4.9	—	—	—	—	—
230v/1ϕ	⅓	2.5	2.5	2.5	2.5	2.5	2.5	2.5	—	—	—	—	—
200v/3ϕ	⅓	2.0	2.0	2.0	2.0	2.0	2.0	2.0	—	—	—	—	—
230v/3ϕ	⅓	1.8	1.8	1.8	1.8	1.8	1.8	1.8	—	—	—	—	—
460v/3ϕ	⅓	.9	.9	.9	.9	.9	.9	.9	—	—	—	—	—
115v/1ϕ	½	—	8.8	8.8	8.8	8.8	8.8	8.8	8.8	—	—	—	—
230v/1ϕ	½	—	4.0	4.0	4.0	4.0	4.0	4.0	4.0	—	—	—	—
200v/3ϕ	½	—	2.7	2.7	2.7	2.7	2.7	2.7	2.7	—	—	—	—
230v/3ϕ	½	—	2.8	2.8	2.8	2.8	2.8	2.8	2.8	—	—	—	—
460v/3ϕ	½	—	1.4	1.4	1.4	1.4	1.4	1.4	1.4	—	—	—	—
115v/1ϕ	¾	—	11.3	—	11.3	11.3	11.3	11.3	11.3	11.3	—	—	—
230v/1ϕ	¾	—	5.7	—	5.7	5.7	5.7	5.7	5.7	5.7	—	—	—
200v/3ϕ	¾	—	3.4	—	3.4	3.4	3.4	3.4	3.4	3.4	—	—	—
230v/3ϕ	¾	—	3.2	—	3.2	3.2	3.2	3.2	3.2	3.2	—	—	—
460v/3ϕ	¾	—	1.6	—	1.6	1.6	1.6	1.6	1.6	1.6	—	—	—
115v/1ϕ	1	—	—	—	—	13.7	13.7	13.7	13.7	13.7	13.7	13.7	—
230v/1ϕ	1	—	—	—	—	6.9	6.9	6.9	6.9	6.9	6.9	6.9	—
200v/3ϕ	1	—	—	—	—	4.2	4.2	4.2	4.2	4.2	4.2	4.2	—
230v/3ϕ	1	—	—	—	—	4.0	4.0	4.0	4.0	4.0	4.0	4.0	—
460v/3ϕ	1	—	—	—	—	2.0	2.0	2.0	2.0	2.0	2.0	2.0	—
115v/1ϕ	1½	—	—	—	—	—	—	15.6	15.6	15.6	15.6	15.6	15.6
230v/1ϕ	1½	—	—	—	—	—	—	7.8	7.8	7.8	7.8	7.8	7.8
200v/3ϕ	1½	—	—	—	—	—	—	5.8	5.8	5.8	5.8	5.8	5.8
230v/3ϕ	1½	—	—	—	—	—	—	5.4	5.4	5.4	5.4	5.4	5.4
460v/3ϕ	1½	—	—	—	—	—	—	2.7	2.7	2.7	2.7	2.7	2.7
200v/3ϕ	2	—	—	—	—	—	—	—	7.1	7.1	7.1	7.1	7.1
230v/3ϕ	2	—	—	—	—	—	—	—	6.8	6.8	6.8	6.8	6.8
460v/3ϕ	2	—	—	—	—	—	—	—	3.4	3.4	3.4	3.4	3.4
200v/3ϕ	3	—	—	—	—	—	—	—	—	10.8	10.8	10.8	10.8
230v/3ϕ	3	—	—	—	—	—	—	—	—	9.0	9.0	9.0	9.0
460v/3ϕ	3	—	—	—	—	—	—	—	—	4.5	4.5	4.5	4.5
200v/3ϕ	5	—	—	—	—	—	—	—	—	—	—	14.5	14.5
230v/3ϕ	5	—	—	—	—	—	—	—	—	—	—	13.4	13.4
460v/3ϕ	5	—	—	—	—	—	—	—	—	—	—	6.7	6.7

WIRING DIAGRAM SELECTION

A. Field and Submittal Wiring Diagram Selection

Wiring in the field changes little when the brand of the controls furnished on the unit heater changes. Select correct wiring diagrams as follows:

1. Determine unit heater model and size.
2. Select control code number from Table 1.
3. Reference unit heater model in the Page Location Index with control code number and determine correct page number for single-phase or three-phase control. Single-phase wiring diagram page numbers are in the unshaded areas and three-phase diagrams are in the shaded areas.
4. Wiring diagrams for unit heater accessories are listed in Table 2. Use these accessory diagrams along with the unit wiring diagrams for complete wiring instructions.

B. Service and Troubleshooting

Because internal or factory wiring may vary depending on controls manufacturer, the wiring diagrams must be selected with the series identity number when servicing or troubleshooting unit heater control system. Wiring diagrams in this bulletin are for unit heaters manufactured after March 1991 and the series identity number is the 5th thru the 7th digits of the unit heater serial number.

EXAMPLE: Serial No. — 01121010691 has a series identity number of 101.

To select the correct wiring diagram:

1. Determine unit heater model and size from serial plate located on the side of the unit.
2. Determine the control code numbers from box marked *Control Code,* also on the serial plate.
3. Determine the *series identity number* from unit serial number.
4. Select the Page Location Index which corresponds to the *series identity number* of the unit heater, then proceed with Steps 3 and 4 of Field and Submittal Wiring Diagram Selection.

EXAMPLE SELECTION

Select correct single-phase wiring diagram for a PAE 175A Control Code 11, series identity number 101.

Locate the Page Location Index which shows the page numbers for PAE and BAE units with series identity number 101 (see page i). Select the page number where the column for the PAE 175 intersects with the line for control code 11. The correct single phase wiring diagram for this unit is found on page 1 in the unshaded area. If this unit also has a summer/winter switch the accessory wiring diagram found on page 1A, as per Table 2, would also be required for complete wiring information.

TWO-IN-ONE DIAGRAMS

Two wiring diagrams are furnished for each circuit configuration in this manual. Included are a connection diagram at the left for field installation and a circuit schematic at the right to aid in continuity and trouble shooting.

The heavier lines in the connection diagram indicate line voltage; the lighter lines are for low voltage. Solid lines show pre-wiring performed at the factory; dotted lines inform the installer of connections required to put the heater in operation.

TABLE 1 — CONTROL CODE DESCRIPTIONS

08, 09	Intermittent Pilot Ignition, Non-Lockout, Fan-Time Delay, Low Voltage Thermostat, Natural Gas.
11, 12	Standing Pilot, 100% Shut-Off, Fan-Time Delay, Low Voltage Thermostat, Natural Gas.
81, 82	Standing Pilot, 100% Shut-Off, Fan-Time Delay, Low Voltage Thermostat, Propane Gas.
25, 26	Two Stage, Standing Pilot, 100% Shut-Off, Low Voltage Thermostat, Natural Gas.
83, 84	Two Stage, Standing Pilot, 100% Shut-Off, Low Voltage Thermostat, Propane Gas.
28, 29	Intermittent Pilot Ignition with Lockout, Fan-Time Delay, Low Voltage Thermostat, Natural Gas.
78, 79	Intermittent Pilot Ignition with Lockout, Fan-Time Delay, Low Voltage Thermostat, Propane Gas.
51, 52	Mechanical Modulation, Intermittent Pilot Ignition, Non-Lockout, Natural Gas (BAE Models Only).
55, 56	Two Stage, Intermittent Pilot Ignition, Non-Lockout, Natural Gas.
61, 62	Mechanical Modulation, Intermittent Pilot Ignition with Lockout, Natural Gas (BAE Models Only).
76, 77	Mechanical Modulation, Intermittent Pilot Ignition with Lockout, Propane Gas (BAE Models Only).
65, 66	Two Stage, Intermittent Pilot Ignition with Lockout, Natural Gas.
95, 96	Two Stage, Intermittent Pilot Ignition with Lockout, Propane Gas.

TABLE 2 — ACCESSORIES

Page	Accessory
1A	Summer/Winter Switch
1B	Power Venter
2A	Combination Summer/Winter Switch and Power Venter
2B	Energy Saver

WIRING DIAGRAM INDEX FOR MODELS PAE AND BAE MANUFACTURED AFTER MARCH 1991

SERIES 101

Control Code	PAE 30	PAE/ BAE 50	PAE/ BAE 75	PAE/ BAE 100	PAE/ BAE 125	PAE/ BAE 145	PAE/ BAE 175	PAE/ BAE 200	PAE/ BAE 225	PAE/ BAE 250	PAE/ BAE 300	PAE/ BAE 350	PAE/ BAE 400
08, 09	9/10	9/10	9/10	9/10	9/10	9/10	9/10	9/10	9/10	9/10	9/10	9/10	9/10
11, 12	1/2	1/2	1/2	1/2	1/2	1/2	1/2	1/2	1/2	1/2	1/2	—/—	—/—
81, 82	1/2	1/2	1/2	1/2	1/2	1/2	1/2	1/2	1/2	1/2	1/2	1/2	1/2
25, 26	5/6	5/6	5/6	5/6	5/6	5/6	5/6	5/6	7/8	7/8	7/8	7/8	7/8
83, 84	5/6	5/6	5/6	5/6	5/6	5/6	5/6	5/6	5/6	5/6	7/8	7/8	7/8
28, 29	9/10	9/10	9/10	9/10	9/10	9/10	9/10	9/10	9/10	9/10	9/10	9/10	9/10
78, 79	9/10	9/10	9/10	9/10	9/10	9/10	9/10	9/10	9/10	9/10	9/10	9/10	9/10
51, 52	11/12	11/12	11/12	11/12	11/12	11/12	11/12	11/12	11/12	11/12	11/12	11/12	11/12
55, 56	13/14	13/14	13/14	13/14	13/14	13/14	13/14	13/14	13/14	13/14	13/14	13/14	13/14
61, 62	11/12	11/12	11/12	11/12	11/12	11/12	11/12	11/12	11/12	11/12	11/12	11/12	11/12
76, 77	11/12	11/12	11/12	11/12	11/12	11/12	11/12	11/12	11/12	11/12	11/12	11/12	11/12
65, 66	13/14	13/14	13/14	13/14	13/14	13/14	13/14	13/14	13/14	13/14	13/14	13/14	13/14
95, 96	13/14	13/14	13/14	13/14	13/14	13/14	13/14	13/14	13/14	13/14	13/14	13/14	13/14

WIRING DIAGRAM INDEX FOR MODELS PAE AND BAE MANUFACTURED AFTER MARCH 1991

SERIES 102

Control Code	PAE 30	PAE/ BAE 50	PAE/ BAE 75	PAE/ BAE 100	PAE/ BAE 125	PAE/ BAE 145	PAE/ BAE 175	PAE/ BAE 200	PAE/ BAE 225	PAE/ BAE 250	PAE/ BAE 300	PAE/ BAE 350	PAE/ BAE 400
08, 09	15 / 16	15 / 16	15 / 16	15 / 16	15 / 16	15 / 16	15 / 16	15 / 16	15 / 16	15 / 16	15 / 16	15 / 16	15 / 16
11, 12	1 / 2	1 / 2	1 / 2	1 / 2	1 / 2	1 / 2	1 / 2	1 / 2	3 / 4	3 / 4	3 / 4	3 / 4	3 / 4
81, 82	1 / 2	1 / 2	1 / 2	1 / 2	1 / 2	1 / 2	1 / 2	1 / 2	3 / 4	3 / 4	3 / 4	3 / 4	3 / 4
25, 26													
83, 84													
28, 29	15 / 16	15 / 16	15 / 16	15 / 16	15 / 16	15 / 16	15 / 16	15 / 16	15 / 16	15 / 16	15 / 16	15 / 16	15 / 16
78, 79	15 / 16	15 / 16	15 / 16	15 / 16	15 / 16	15 / 16	15 / 16	15 / 16	15 / 16	15 / 16	15 / 16	15 / 16	15 / 16
51, 52													
55, 56													
61, 62													
76, 77													
65, 66													
95, 96													

WIRING DIAGRAM INDEX FOR MODELS PAE AND BAE MANUFACTURED AFTER MARCH 1991

SERIES 103

Control Code	PAE 30	PAE/ BAE 50	PAE/ BAE 75	PAE/ BAE 100	PAE/ BAE 125	PAE/ BAE 145	PAE/ BAE 175	PAE/ BAE 200	PAE/ BAE 225	PAE/ BAE 250	PAE/ BAE 300	PAE/ BAE 350	PAE/ BAE 400
08, 09													
11, 12	— —	— —	— —	— —	— —	— —	— —	— —	3 4	3 4	3 4	3 4	3 4
81, 82	— —	— —	— —	— —	— —	— —	— —	— —	3 4	3 4	3 4	3 4	3 4
25, 26													
83, 84													
28, 29													
78, 79													
51, 52													
55, 56													
61, 62													
76, 77													
65, 66													
95, 96													

UNIT HEATER WIRING DIAGRAM

Wiring Legend		
Factory Field Wire Nut	Line	24V.

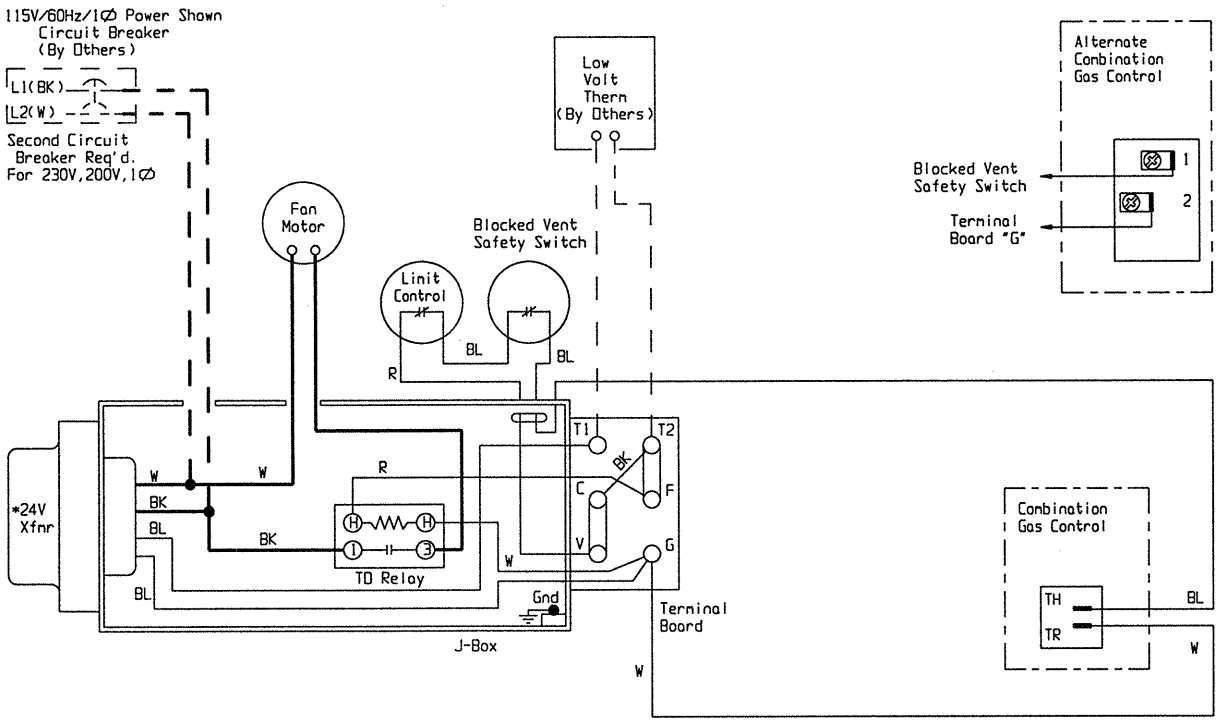

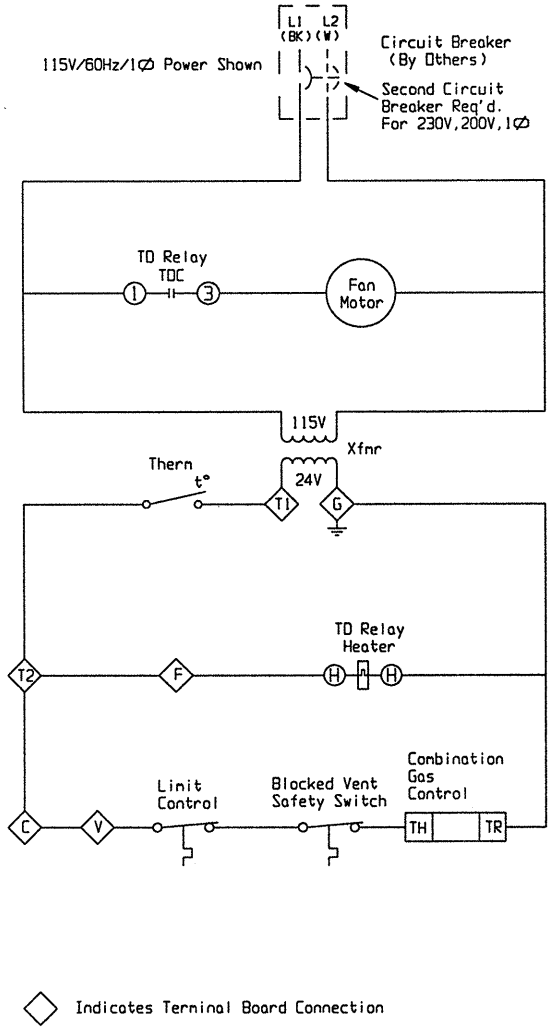

◇ Indicates Terminal Board Connection

Caution
Failure to wire this unit according to this wiring diagram may result in injury to the installer or user. For deviations contact the factory.

Note to installer:
Attach this diagram near heater.

All wiring must comply with national electric code and all local codes.

All components must agree with their respective power source.

Use 105°C wire for replacements.

* Alternate Xfmr.
Primary Xfmr Wires
230V/60Hz/1Ø-BK & Y (OR O)
200V/60Hz/1Ø-BK & R
Wire nut the wire not used.

5H73095C2 REV E

Single-Stage, Standing Pilot, 100% Shut-Off, Single-Phase.

UNIT HEATER WIRING DIAGRAM

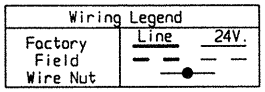

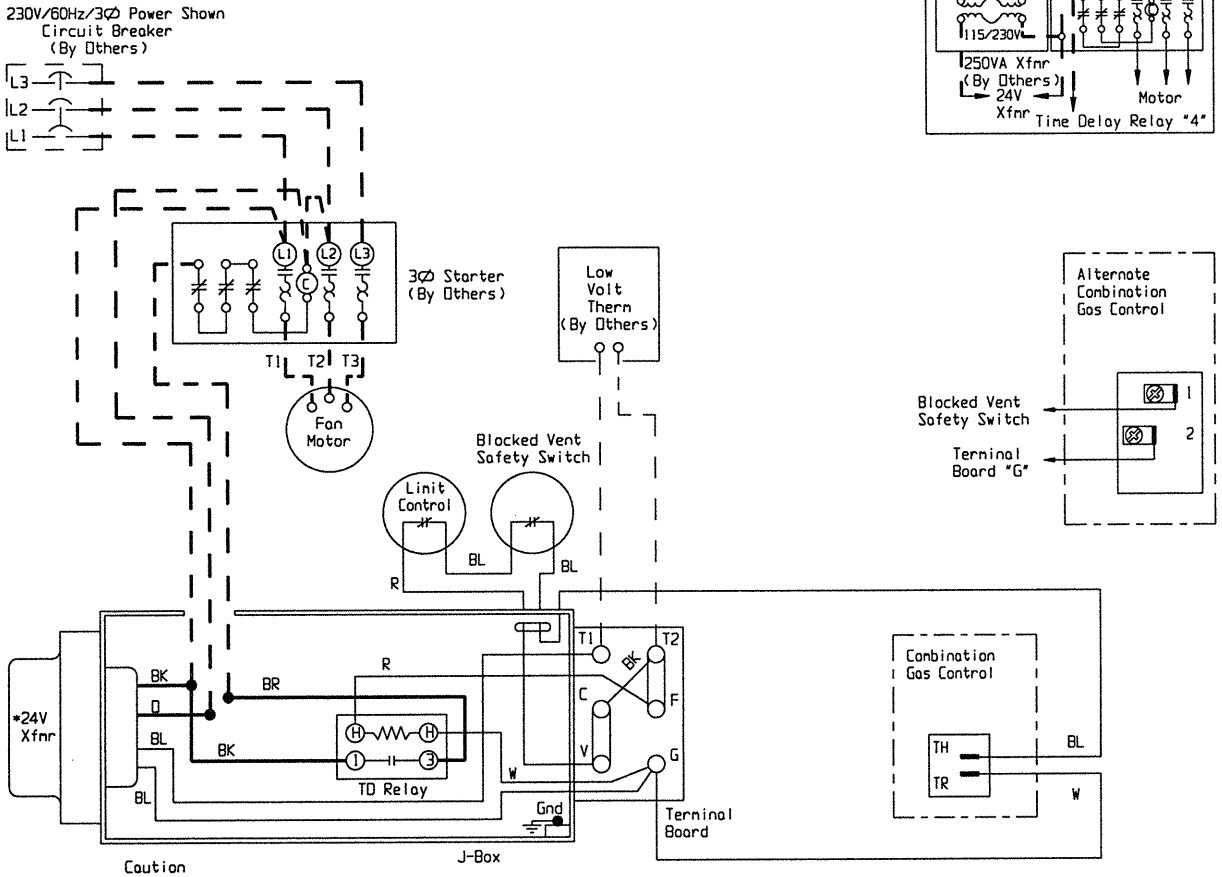

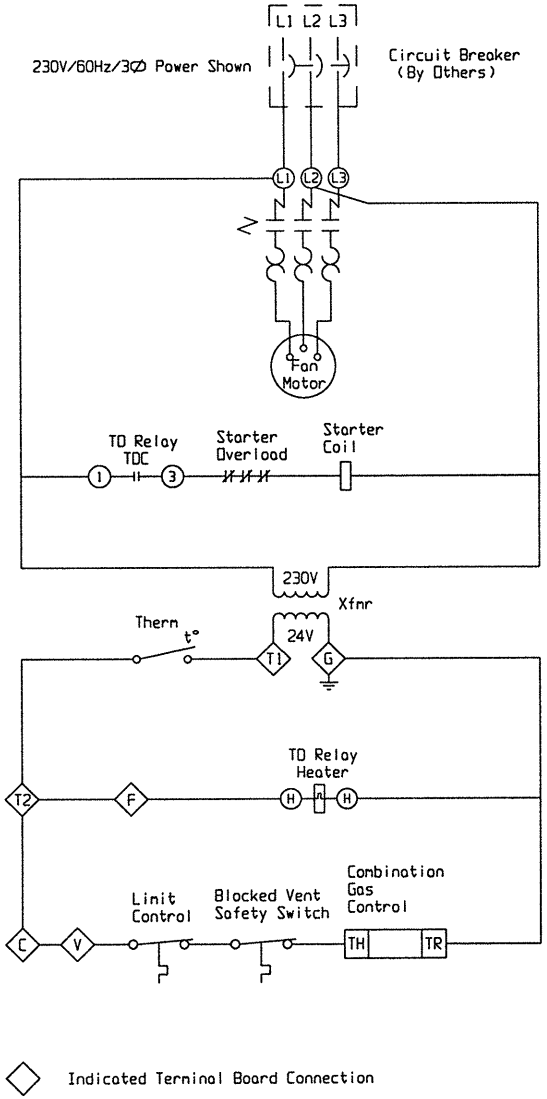

Caution
Failure to wire this unit according to this wiring diagram may result in injury to the installer or user. For deviations contact the factory.

Note to installer:
Attach this diagram near heater.

All wiring must comply with national electric code and all local codes.

All components must agree with their respective power source.

Use 105°C wire for replacements.

* Alternate Xfnr.
Primary Xfnr Wires
230V/60Hz/1Ø-BK & Y (OR O)
200V/60Hz/1Ø-BK & R
Wire nut the wire not used.

5H73095C2 REV E

Single-Stage, Standing Pilot, 100% Shut-Off, Three-Phase.

UNIT HEATER WIRING DIAGRAM

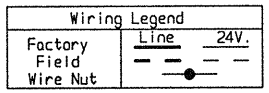

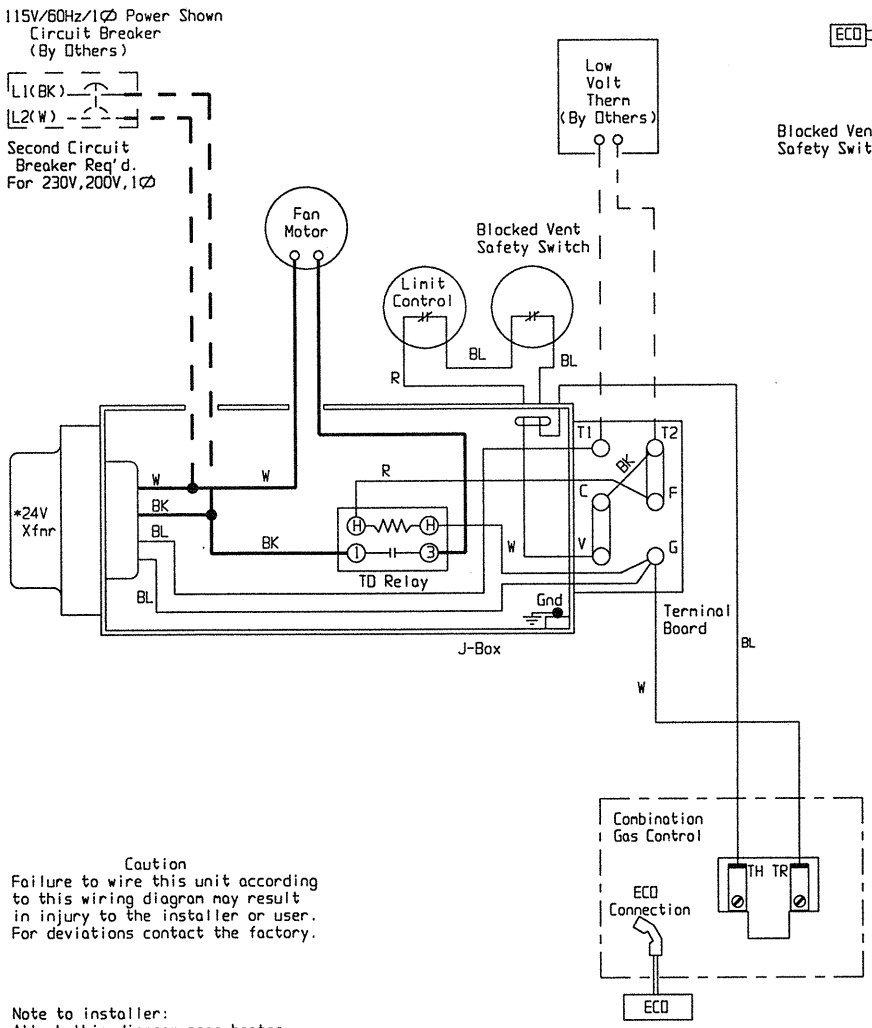

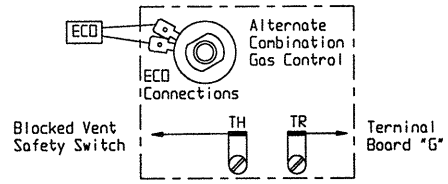

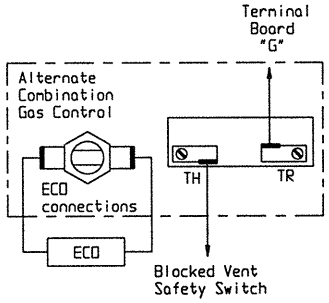

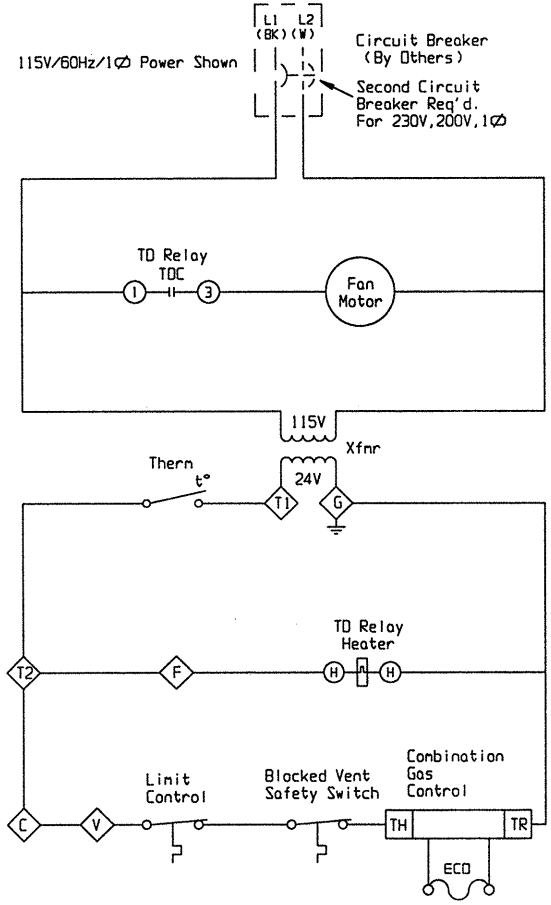

◇ Indicates Terminal Board Connection

Caution
Failure to wire this unit according to this wiring diagram may result in injury to the installer or user. For deviations contact the factory.

Note to installer:
Attach this diagram near heater.

All wiring must comply with national electric code and all local codes.

All components must agree with their respective power source.

Use 105°C wire for replacements.

* Alternate Xfmr.
Primary Xfmr Wires
230V/60Hz/1Ø-BK & Y (OR O)
200V/60Hz/1Ø-BK & R
Wire nut the wire not used.

5H73095C3 REV E

Single-Stage, Standing Pilot, 100% Shut-Off, Single-Phase.

UNIT HEATER WIRING DIAGRAM

Wiring Legend		
Factory Field Wire Nut	Line	24V.

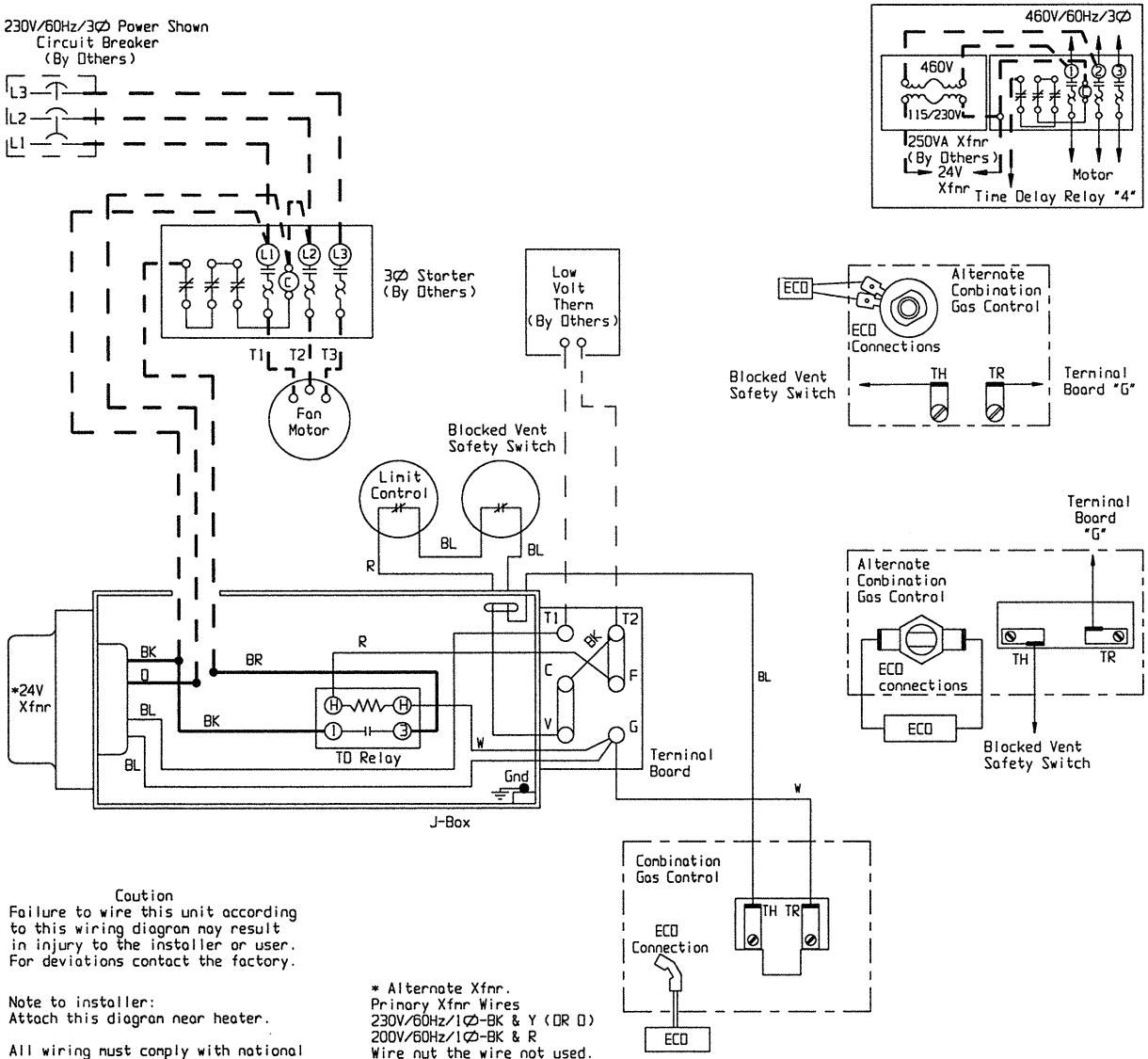

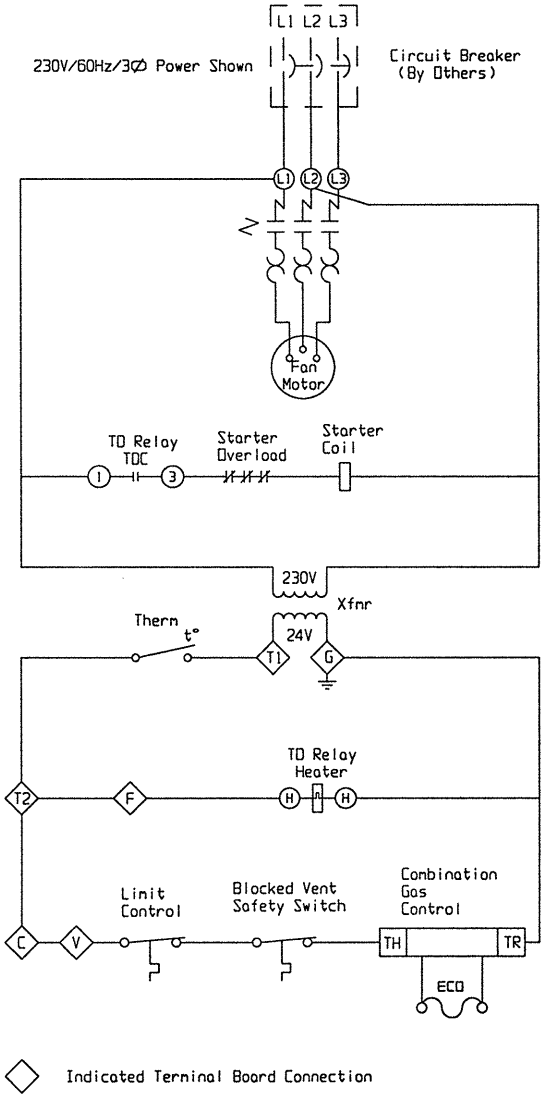

Caution
Failure to wire this unit according to this wiring diagram may result in injury to the installer or user. For deviations contact the factory.

Note to installer:
Attach this diagram near heater.

All wiring must comply with national electric code and all local codes.

All components must agree with their respective power source.

Use 105°C wire for replacements.

* Alternate Xfnr.
Primary Xfnr Wires
230V/60Hz/1Ø-BK & Y (OR O)
200V/60Hz/1Ø-BK & R
Wire nut the wire not used.

5H73095C3 REV E

Single-Stage, Standing Pilot, 100% Shut-Off, Three-Phase.

UNIT HEATER WIRING DIAGRAM

Wiring Legend		
Factory Field Wire Nut	Line	24V.

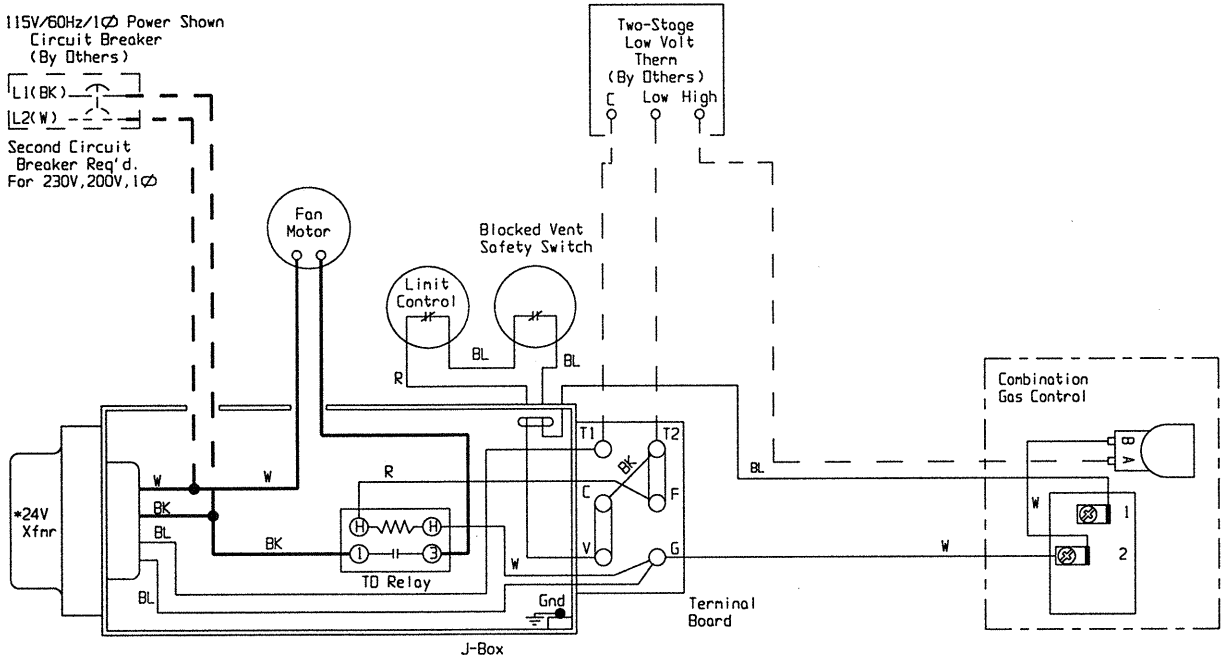

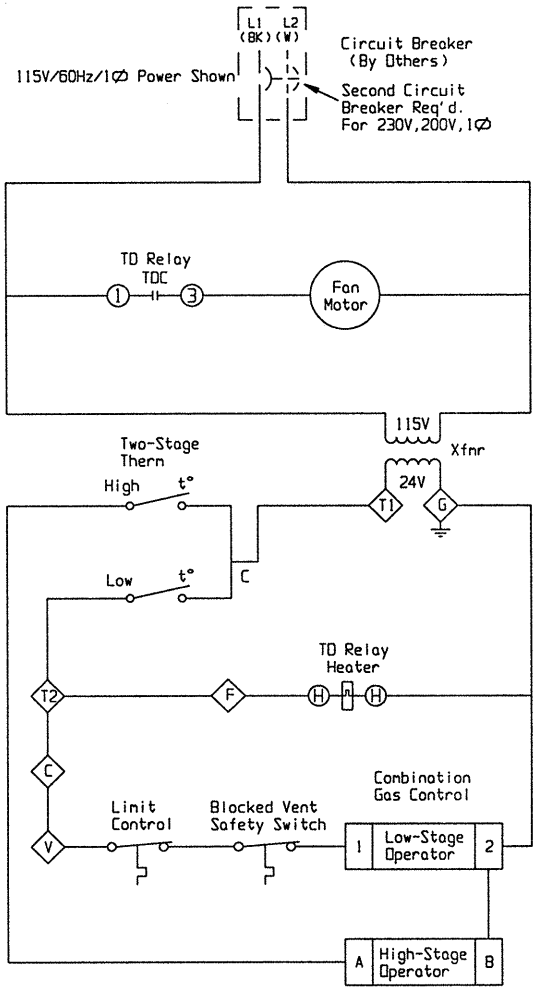

Caution
Failure to wire this unit according to this wiring diagram may result in injury to the installer or user. For deviations contact the factory.

Note to installer:
Attach this diagram near heater.

All wiring must comply with national electric code and all local codes.

All components must agree with their respective power source.

Use 105°C wire for replacements.

* Alternate Xfmr.
Primary Xfmr Wires
230V/60Hz/1∅-BK & Y (OR O)
200V/60Hz/1∅-BK & R
Wire nut the wire not used.

5H73095C4 REV C

Two-Stage, Standing Pilot, 100% Shut-Off, Single-Phase.

◇ Indicates Terminal Board Connection

UNIT HEATER WIRING DIAGRAM

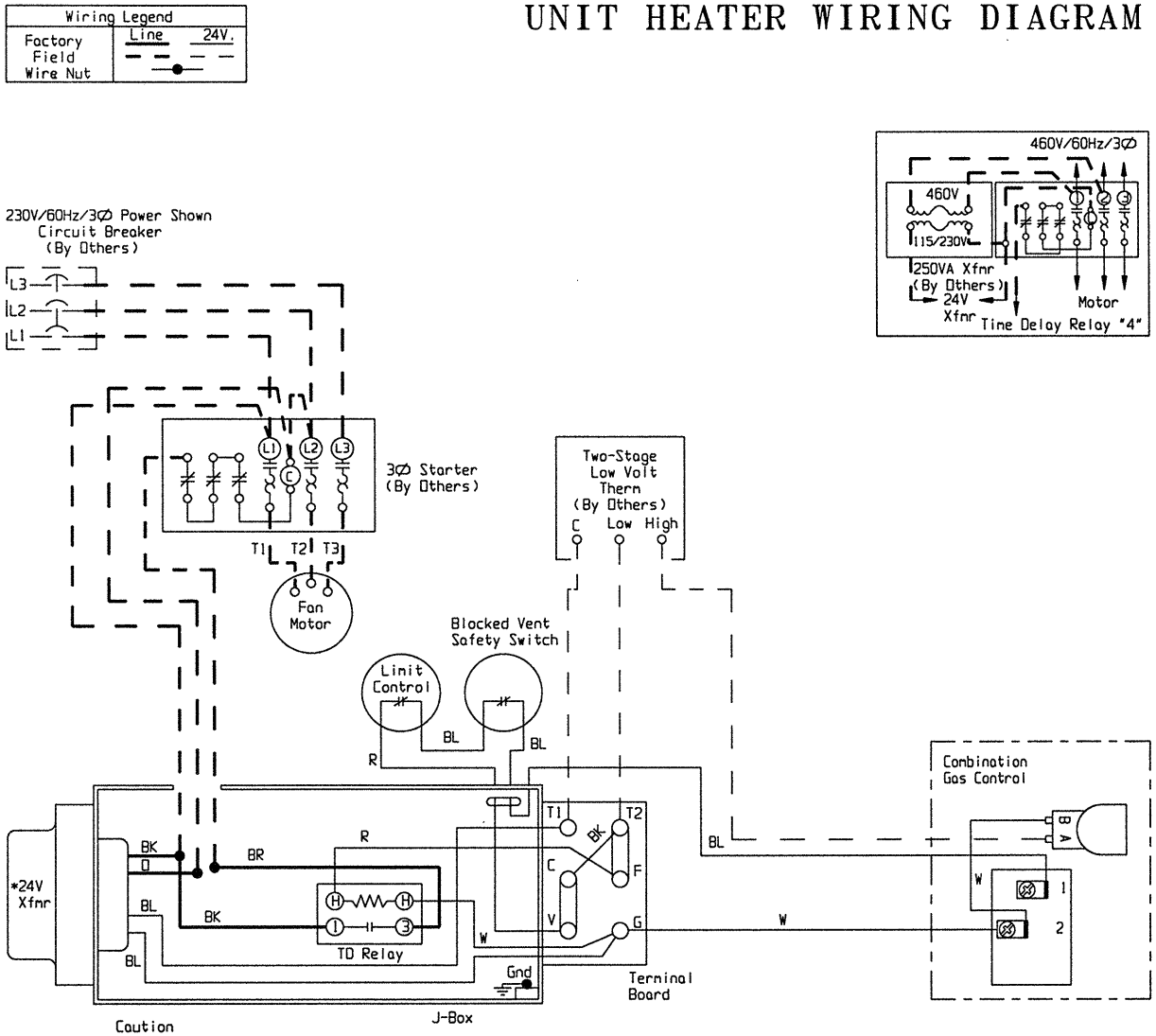

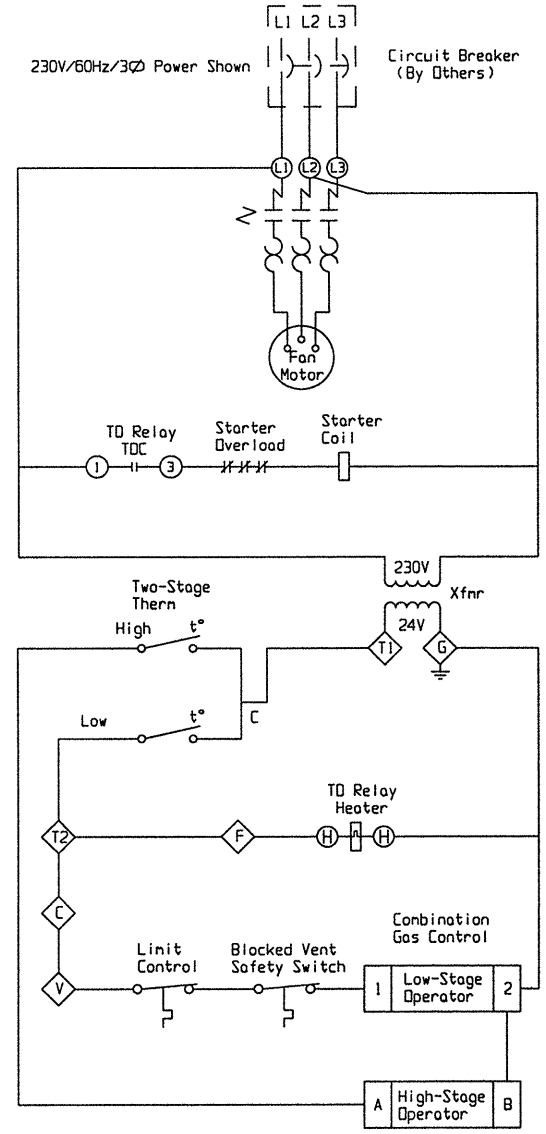

Caution
Failure to wire this unit according to this wiring diagram may result in injury to the installer or user. For deviations contact the factory.

Note to installer:
Attach this diagram near heater.

All wiring must comply with national electric code and all local codes.

All components must agree with their respective power source.

Use 105°C wire for replacements.

* Alternate Xfnr.
Primary Xfnr Wires
230V/60Hz/1Ø-BK & Y (OR O)
200V/60Hz/1Ø-BK & R
Wire nut the wire not used.

5H73095C4 REV C

Two-Stage, Standing Pilot, 100% Shut-Off, Three-Phase.

UNIT HEATER WIRING DIAGRAM

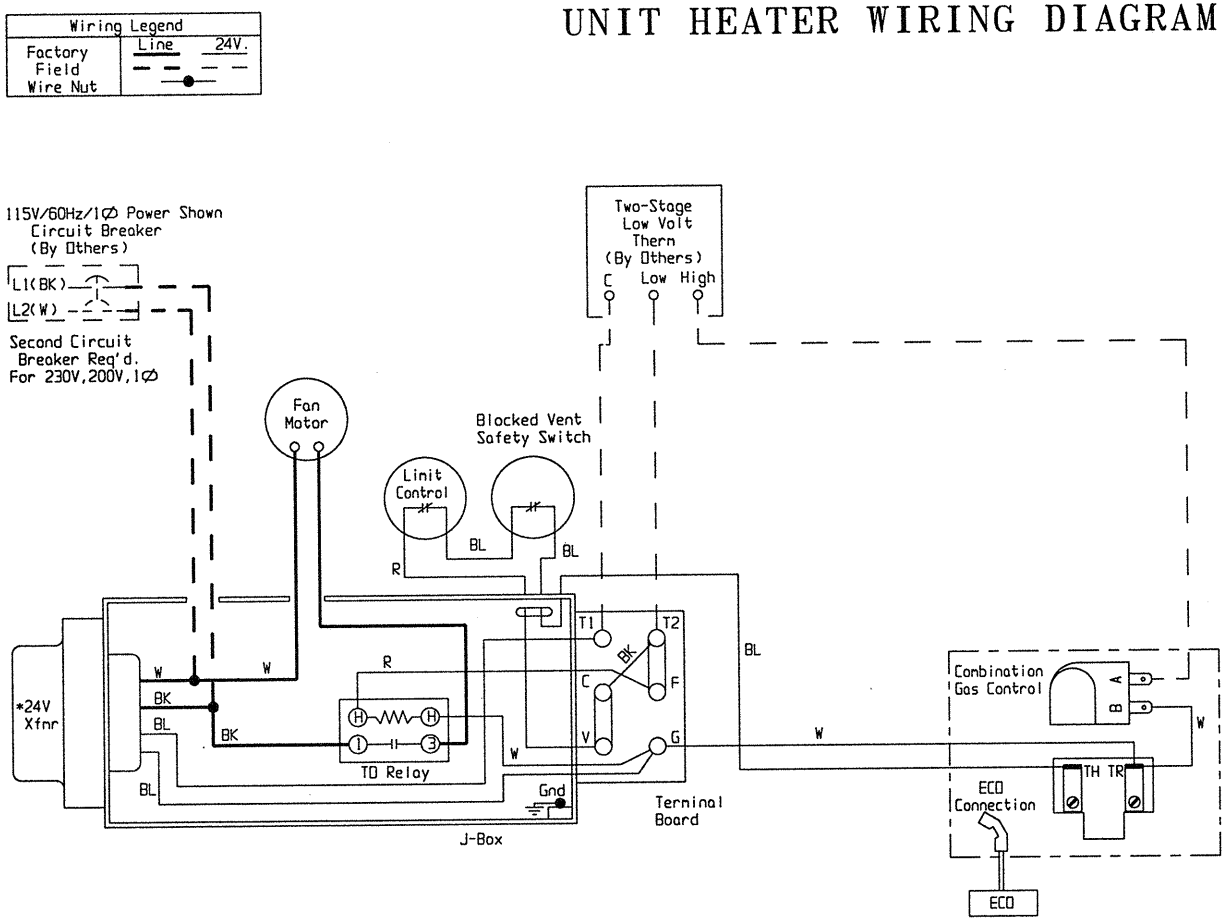

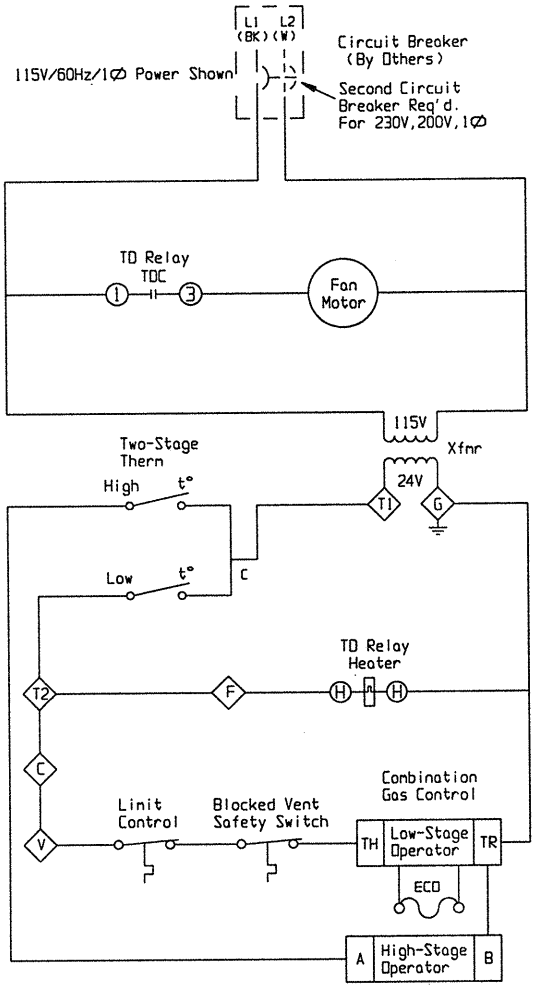

◇ Indicates Terminal Board Connection

Caution
Failure to wire this unit according to this wiring diagram may result in injury to the installer or user. For deviations contact the factory.

Note to installer:
Attach this diagram near heater.

All wiring must comply with national electric code and all local codes.

All components must agree with their respective power source.

Use 105°C wire for replacements.

* Alternate Xfmr.
Primary Xfmr Wires
230V/60Hz/1Ø-BK & Y (OR O)
200V/60Hz/1Ø-BK & R
Wire nut the wire not used.

5H73095C5 REV D

Two-Stage, Standing Pilot, 100% Shut-Off, Single-Phase.

UNIT HEATER WIRING DIAGRAM

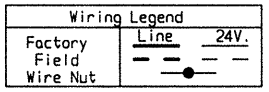

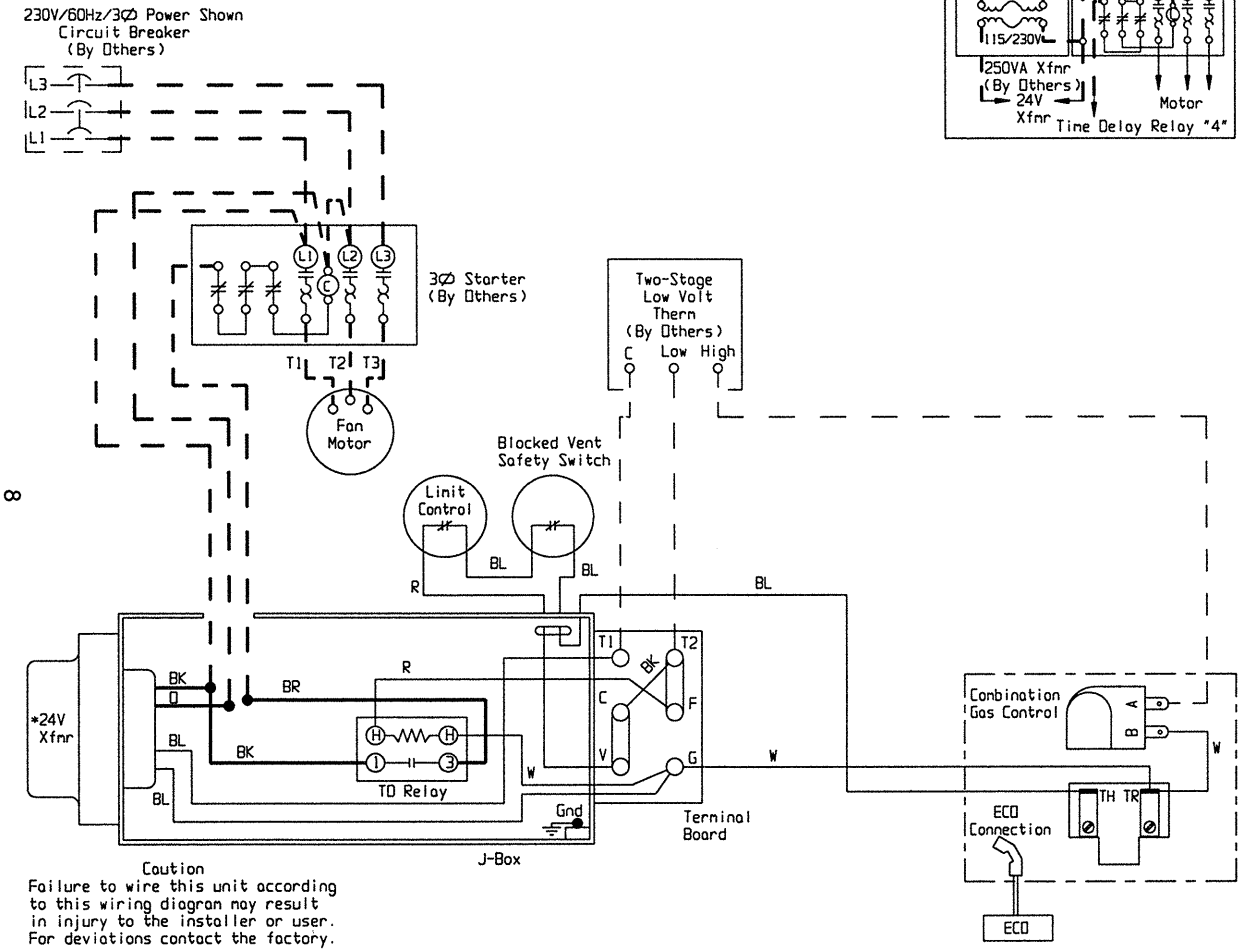

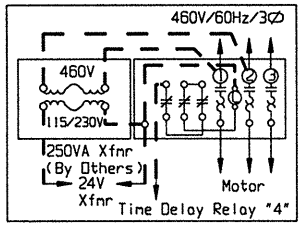

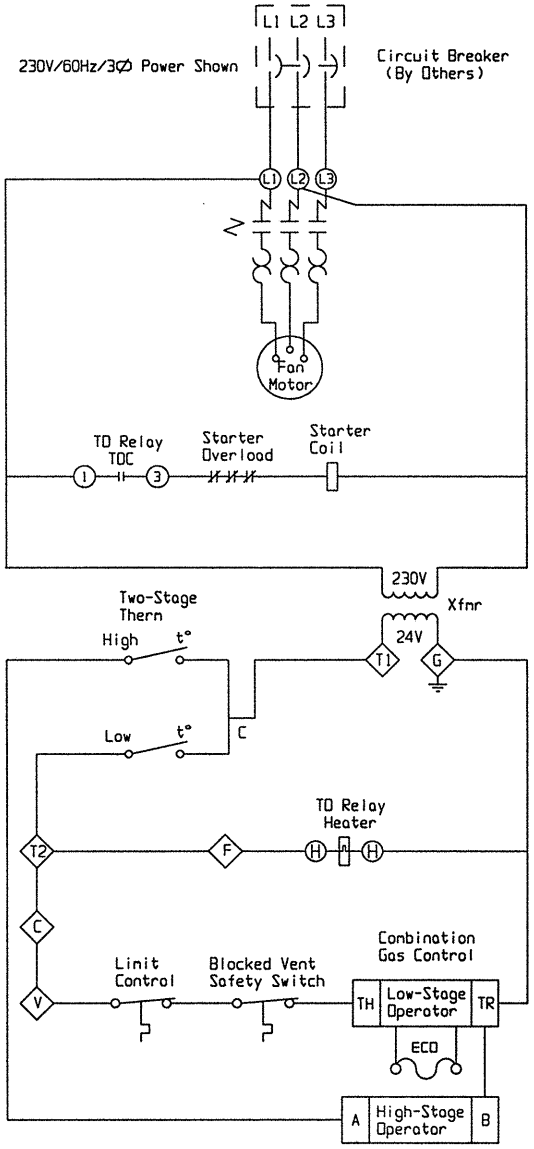

◇ Indicated Terminal Board Connection

Caution
Failure to wire this unit according to this wiring diagram may result in injury to the installer or user. For deviations contact the factory.

Note to installer:
Attach this diagram near heater.

All wiring must comply with national electric code and all local codes.

All components must agree with their respective power source.

Use 105°C wire for replacements.

* Alternate Xfmr.
Primary Xfmr Wires
230V/60Hz/1Ø-BK & Y (OR O)
200V/60Hz/1Ø-BK & R
Wire nut the wire not used.

5H73095C5 REV D

Two-Stage, Standing Pilot, 100% Shut-Off, Three-Phase.

UNIT HEATER WIRING DIAGRAM

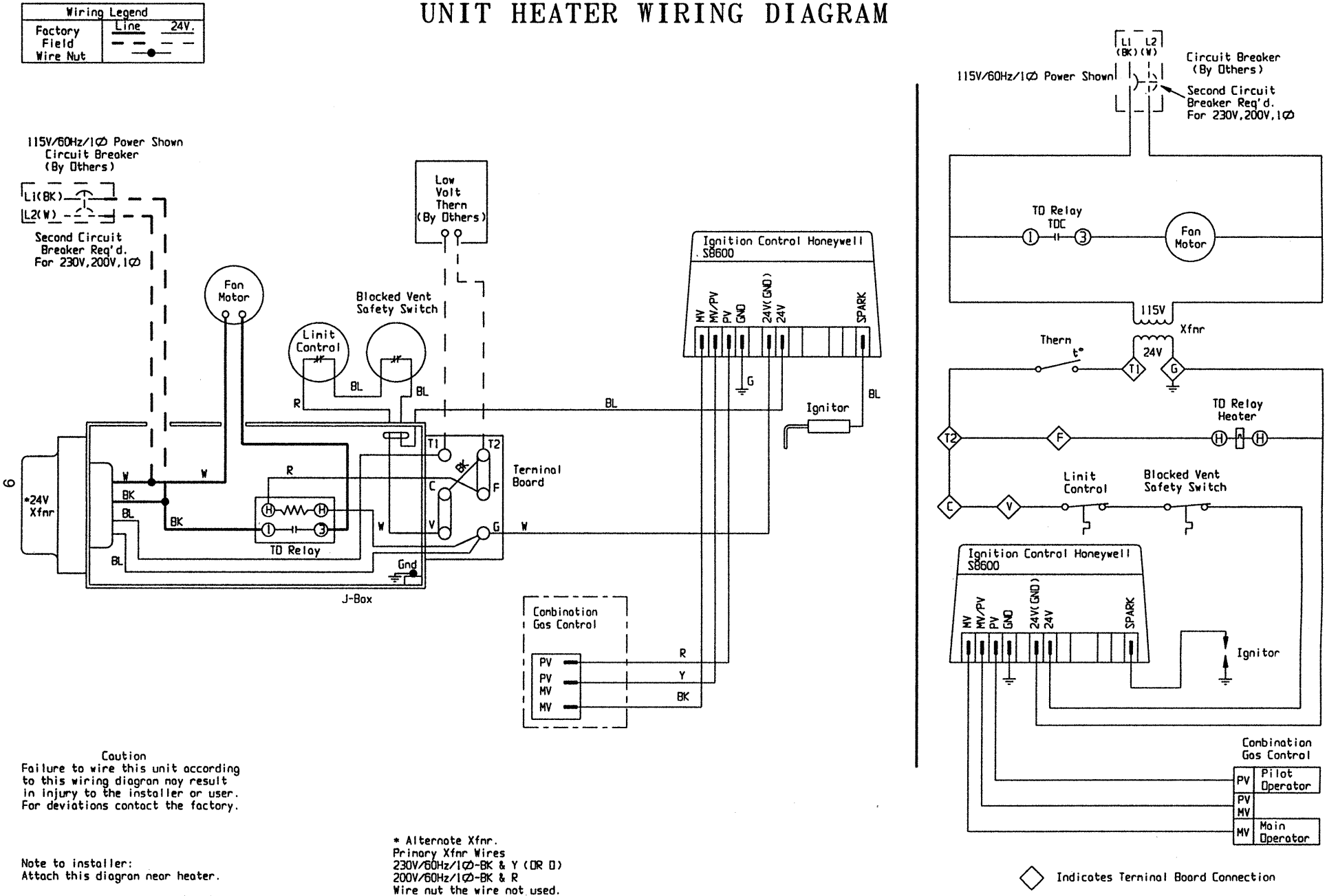

Caution
Failure to wire this unit according to this wiring diagram may result in injury to the installer or user. For deviations contact the factory.

Note to installer:
Attach this diagram near heater.

All wiring must comply with national electric code and all local codes.

All components must agree with their respective power source.

Use 105°C wire for replacements.

* Alternate Xfmr.
Primary Xfmr Wires
230V/60Hz/1Ø-BK & Y (OR O)
200V/60Hz/1Ø-BK & R
Wire nut the wire not used.

5H73095C6 REV E

Single-Stage, Intermittent Pilot, Non-100% Shut-Off, or 100% Shut-Off with Lockout, or 100% Shut-Off with Continous Retry, Single-Phase.

UNIT HEATER WIRING DIAGRAM

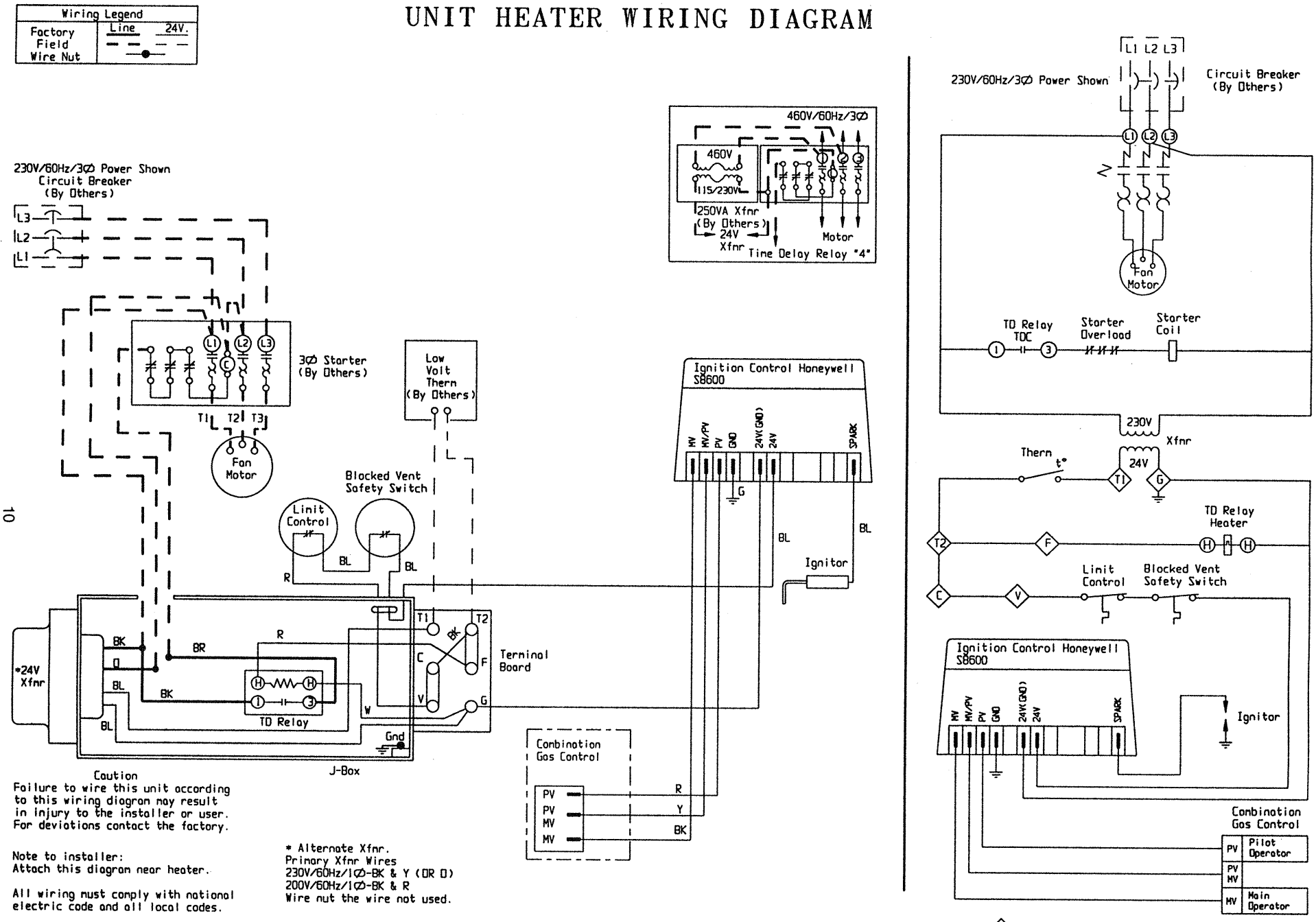

Caution
Failure to wire this unit according to this wiring diagram may result in injury to the installer or user. For deviations contact the factory.

Note to installer:
Attach this diagram near heater.

All wiring must comply with national electric code and all local codes.

All components must agree with their respective power source.

Use 105°C wire for replacements.

* Alternate Xfnr.
Primary Xfnr Wires
230V/60Hz/1Ø-BK & Y (OR O)
200V/60Hz/1Ø-BK & R
Wire nut the wire not used.

5H73095C6 REV E

Single-Stage, Intermittent Pilot, Non-100% Shut-Off, or 100% Shut-Off with Lockout, or 100% Shut-Off with Continous Retry, Three-Phase.

◇ Indicated Terminal Board Connection

UNIT HEATER WIRING DIAGRAM

CAUTION
FAILURE TO WIRE THIS UNIT ACCORDING TO THIS WIRING DIAGRAM MAY RESULT IN INJURY TO THE INSTALLER OR USER. FOR DEVIATIONS CONTACT THE FACTORY.

WIRING LEGEND		
FACTORY FIELD WIRE NUT	LINE	24V.

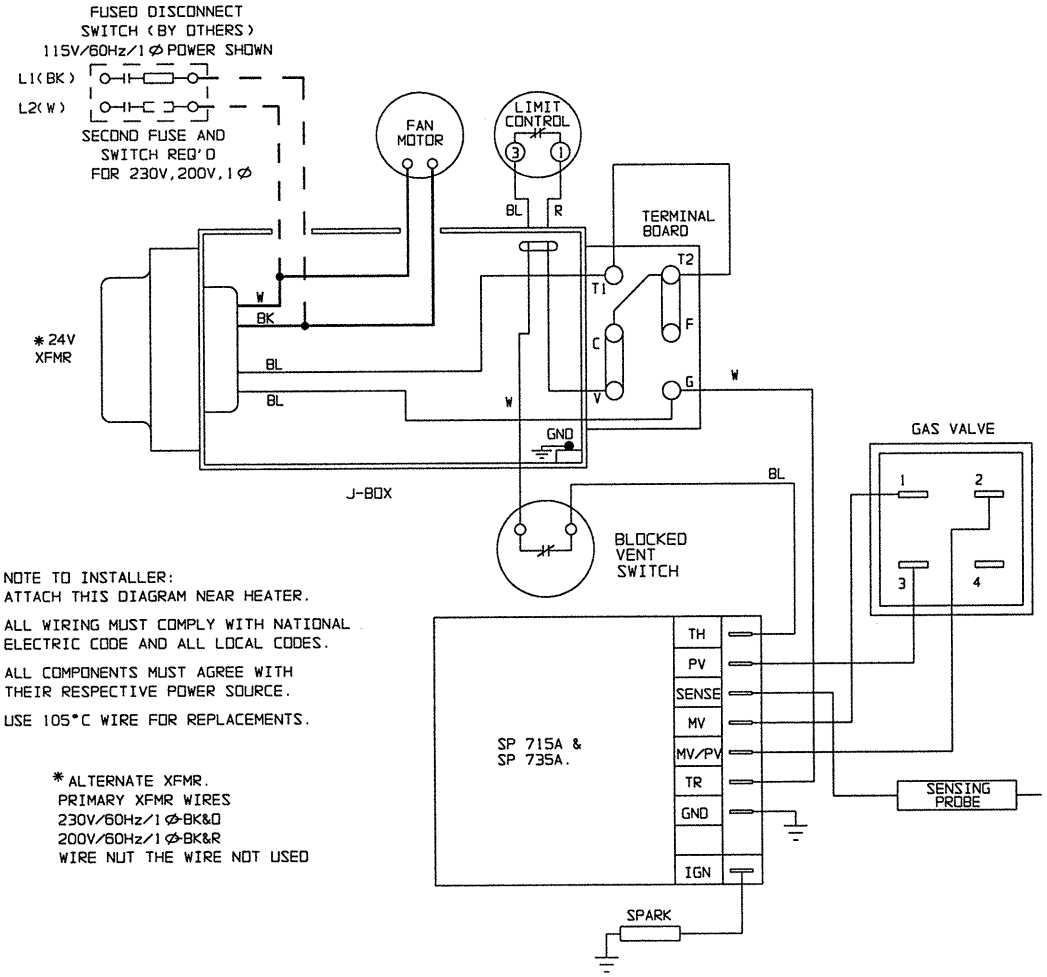

NOTE TO INSTALLER:
ATTACH THIS DIAGRAM NEAR HEATER.

ALL WIRING MUST COMPLY WITH NATIONAL ELECTRIC CODE AND ALL LOCAL CODES.

ALL COMPONENTS MUST AGREE WITH THEIR RESPECTIVE POWER SOURCE.

USE 105°C WIRE FOR REPLACEMENTS.

* ALTERNATE XFMR.
PRIMARY XFMR WIRES
230V/60Hz/1Ø-BK&O
200V/60Hz/1Ø-BK&R
WIRE NUT THE WIRE NOT USED

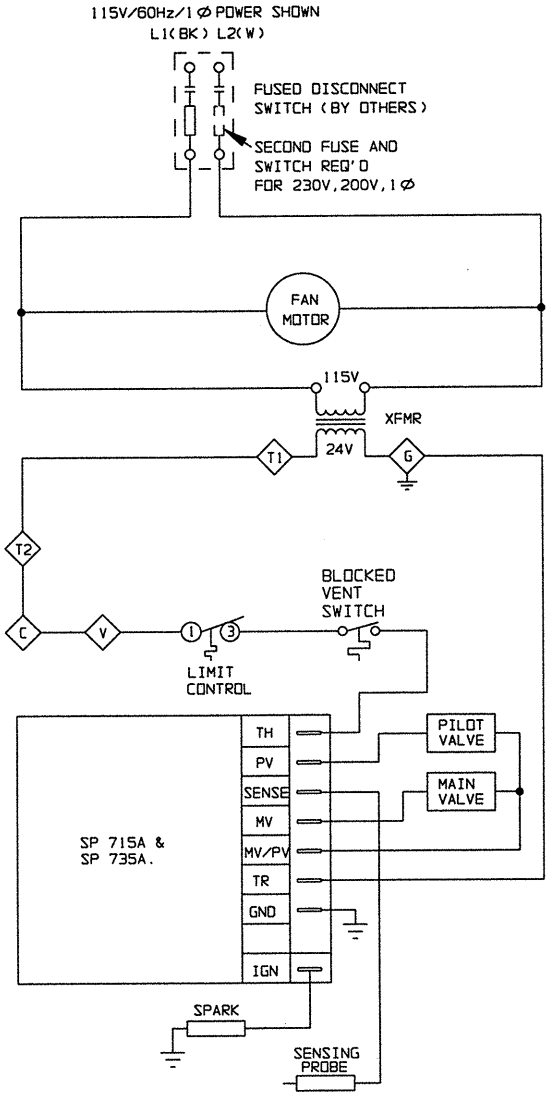

◇ INDICATES TERMINAL BOARD CONNECTION

5H73095C7 REV B

Mechnical Modulation, Intermittent Pilot Ignition, Non-100% (and 100%) Shut-off, Single-phase.

UNIT HEATER WIRING DIAGRAM

CAUTION
FAILURE TO WIRE THIS UNIT ACCORDING TO THIS WIRING DIAGRAM MAY RESULT IN INJURY TO THE INSTALLER OR USER. FOR DEVIATIONS CONTACT THE FACTORY.

WIRING LEGEND		
FACTORY FIELD WIRE NUT	LINE	24V.

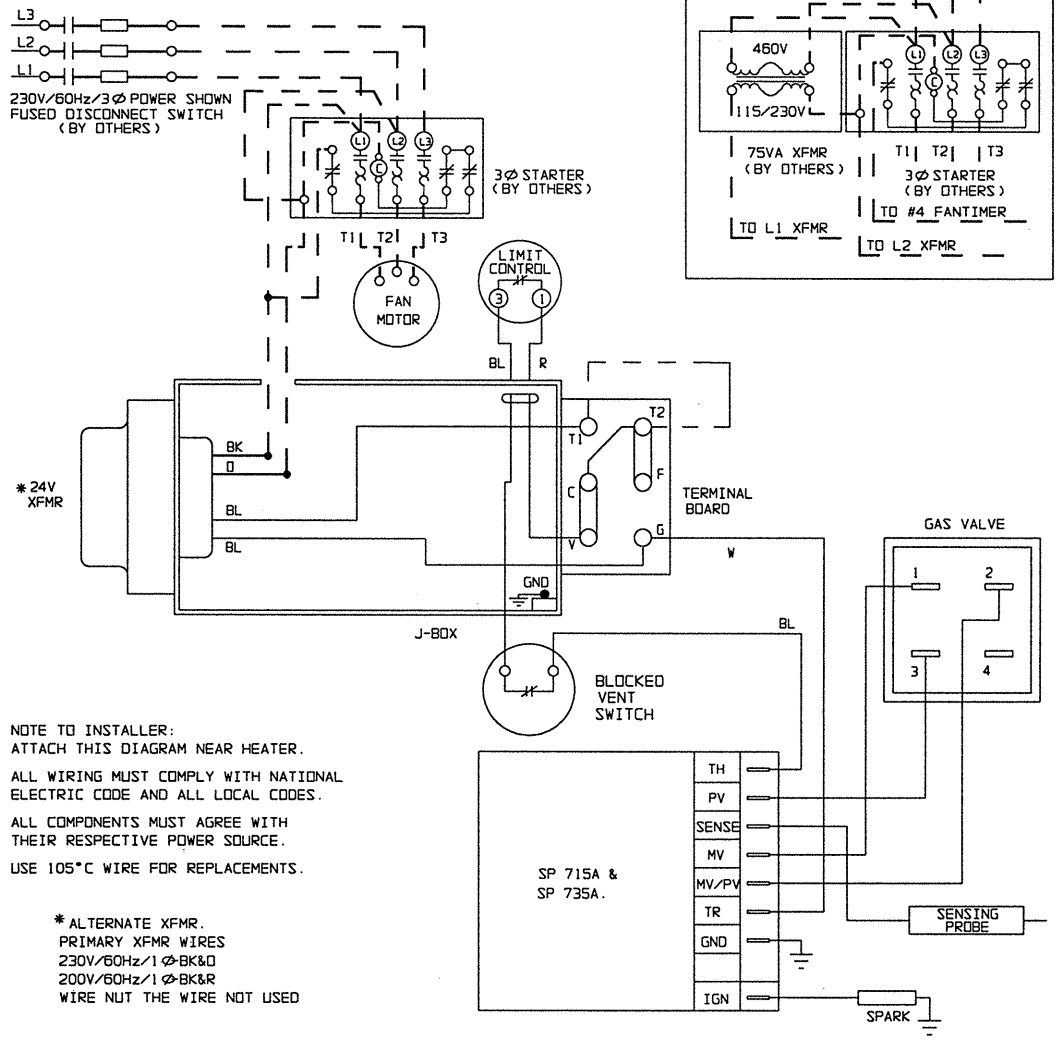

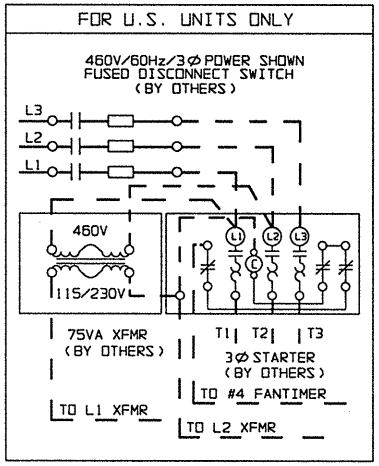

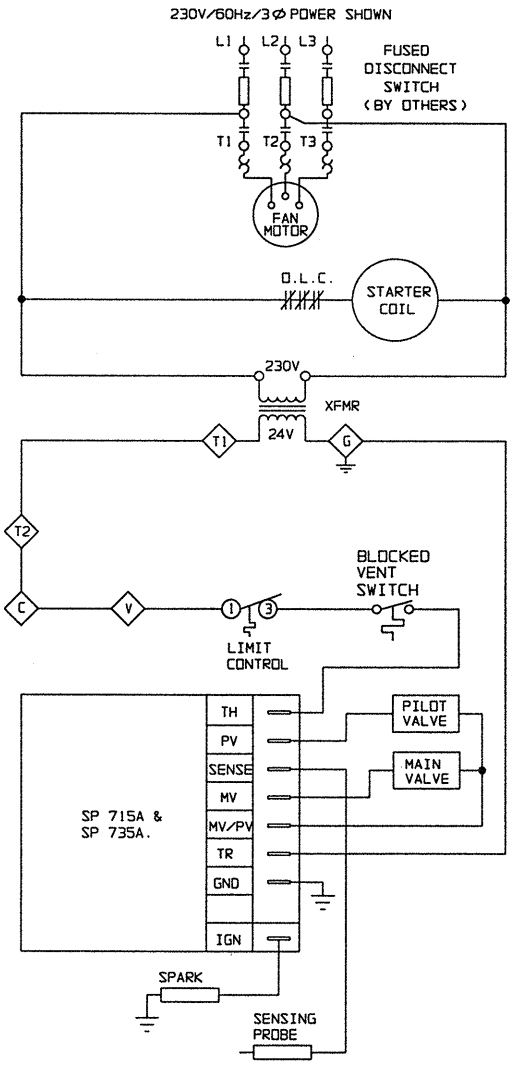

◇ INDICATES TERMINAL BOARD CONNECTION

NOTE TO INSTALLER:
ATTACH THIS DIAGRAM NEAR HEATER.

ALL WIRING MUST COMPLY WITH NATIONAL ELECTRIC CODE AND ALL LOCAL CODES.

ALL COMPONENTS MUST AGREE WITH THEIR RESPECTIVE POWER SOURCE.

USE 105°C WIRE FOR REPLACEMENTS.

* ALTERNATE XFMR.
PRIMARY XFMR WIRES
230V/60Hz/1Ø-BK&D
200V/60Hz/1Ø-BK&R
WIRE NUT THE WIRE NOT USED

5H73095C7 REV B

Mechnical Modulation, Internittent Pilot Ignition, Non-100% (and 100%) Shut-off, Three-phase.

UNIT HEATER WIRING DIAGRAM

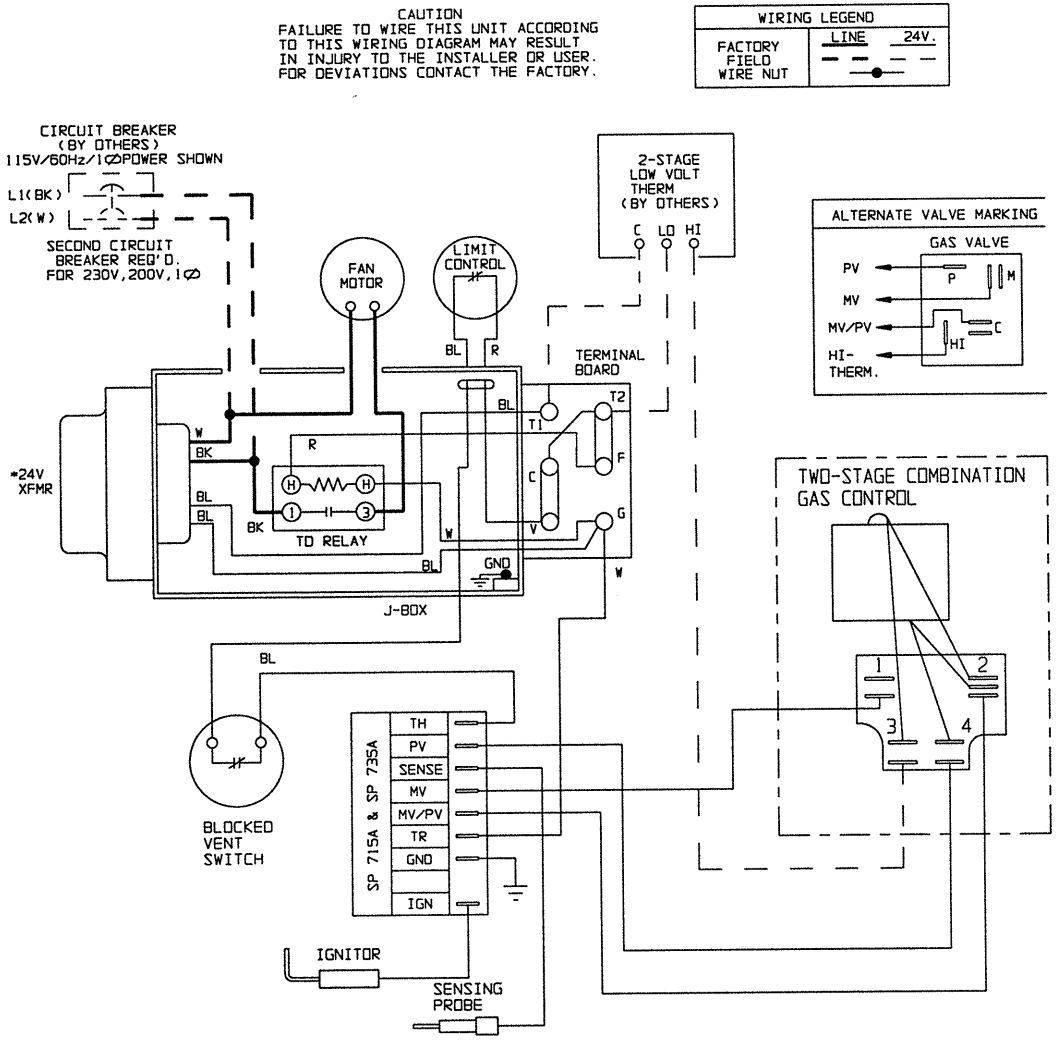

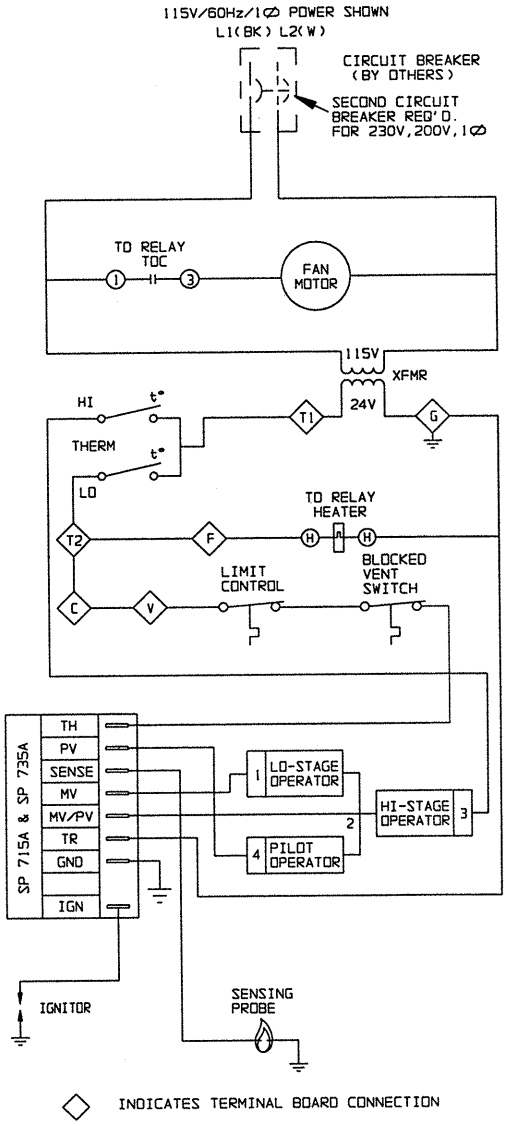

INDICATES TERMINAL BOARD CONNECTION

NOTE TO INSTALLER:
ATTACH THIS DIAGRAM NEAR HEATER.

ALL WIRING MUST COMPLY WITH NATIONAL ELECTRIC CODE AND ALL LOCAL CODES.

ALL COMPONENTS MUST AGREE WITH THEIR RESPECTIVE POWER SOURCE.

USE 105°C WIRE FOR REPLACEMENTS.

* ALTERNATE XFMR.
PRIMARY XFMR WIRES
230V/60Hz/1Ø-BK & Y (OR O)
200V/60Hz/1Ø-BK & R
WIRE NUT THE WIRE NOT USED.

5H73095C8 REV C

Two-stage, Intermittent Pilot Ignition, Non-100% (and 100%), Shut-off, Single-phase

UNIT HEATER WIRING DIAGRAM

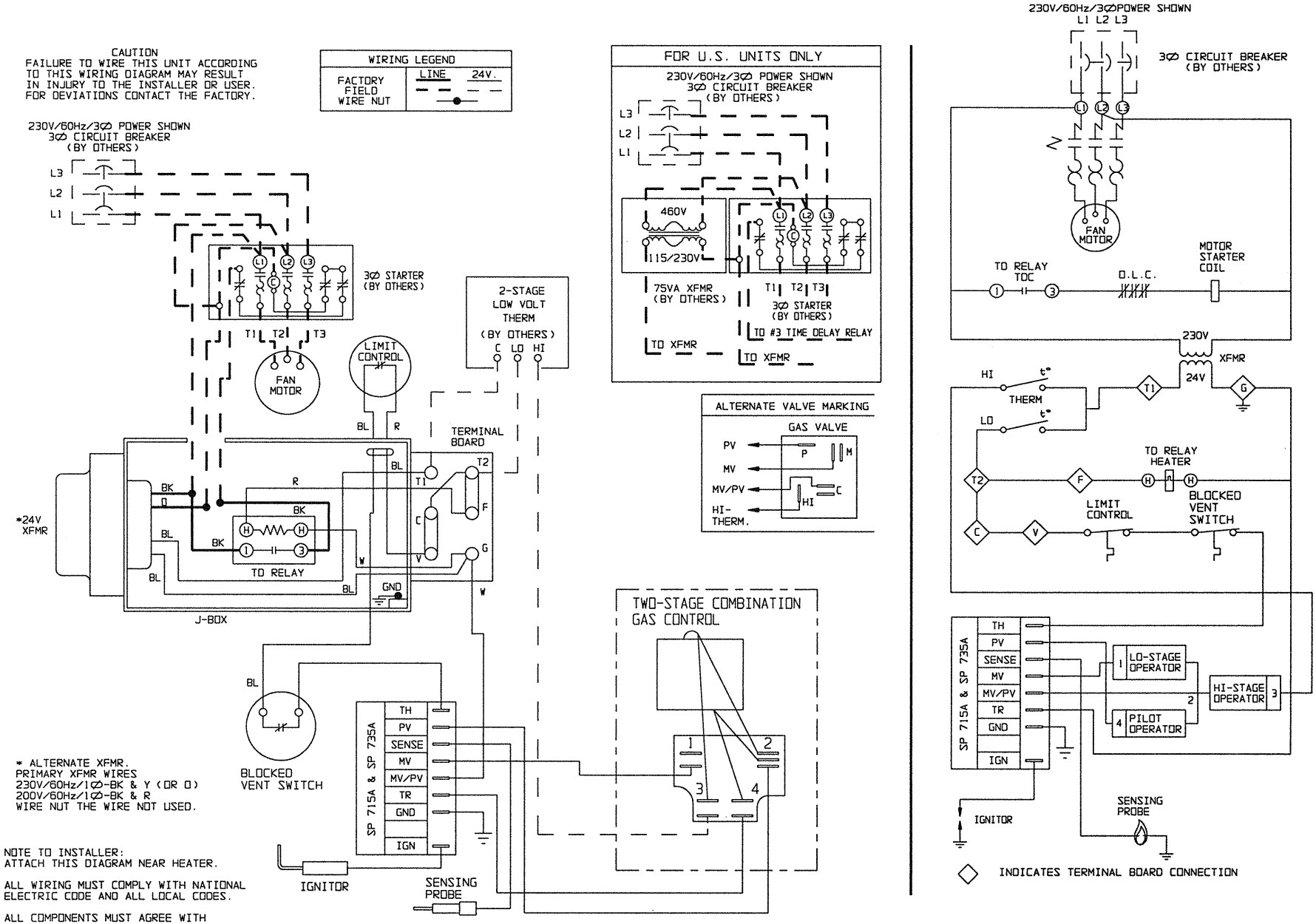

5H73095C8 REV C

Two-stage, Intermittent Pilot Ignition, Non-100% (and 100%) Shut-off, Three- phase

UNIT HEATER WIRING DIAGRAM

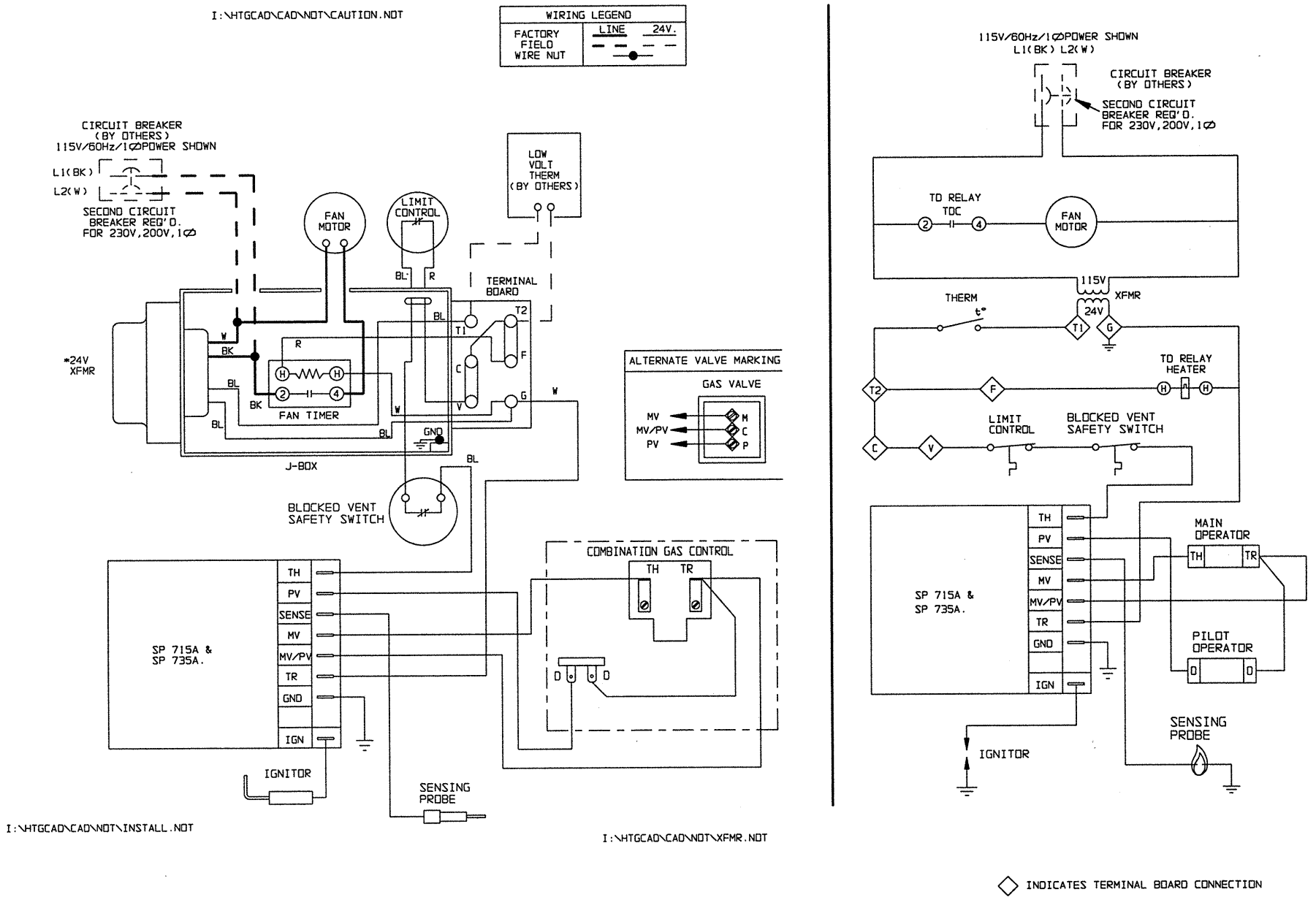

5H73095C9 REV B Single-Stage, Intermittent Pilot Ignition, Non-100% (and 100%) Shut-off, Single-phase.

UNIT HEATER WIRING DIAGRAM

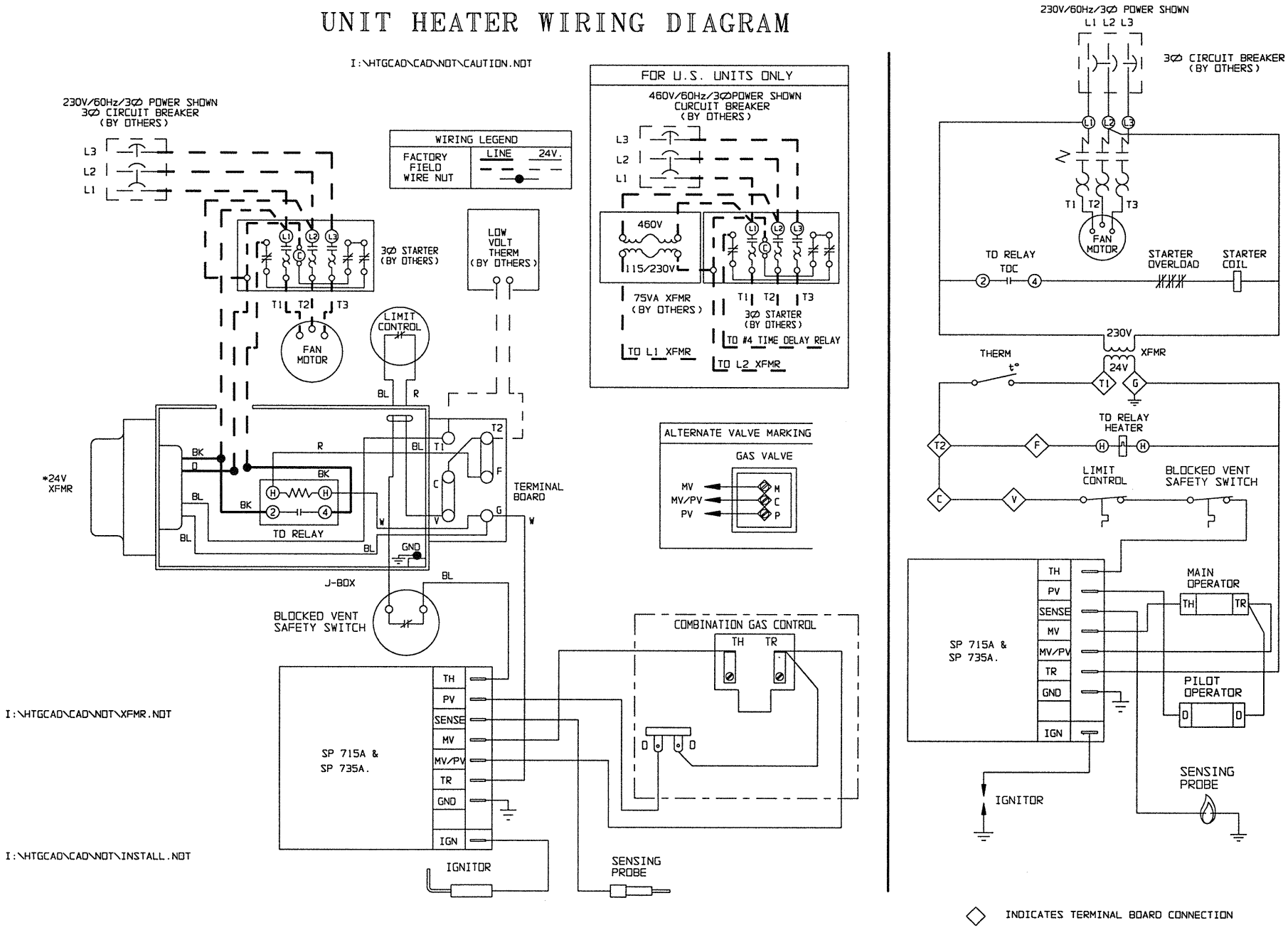

5H73095C9 REV B Single-Stage, Intermittent Pilot Ignition, Non-100% (and 100%) Shut-off, Three-phase.

NOTE: SUMMER/WINTER SWITCH ACCESSORY (PART NO. 78727) WIRING DIAGRAM USED ON MODELS PAE/BAE. THIS TO BE USED IN CONJUNCTION WITH UNIT WIRING DIAGRAM.

MODELS PAE/BAE

Typical Summer/Winter Switch Wiring (taken from 6-554.5, page 1)

CAUTION: Before proceeding with wiring the accessories described, make sure the unit has been installed, vented, piped and wired according to the Installation/Service Manual and Standard Wiring Diagram furnished with the unit heater.

WARNING: TURN OFF ALL POWER AND GAS TO UNIT BEFORE WIRING. FAILURE TO WIRE THIS UNIT ACCORDING TO THIS WIRING DIAGRAM MAY RESULT IN INJURY TO THE INSTALLER OR USER — READ INSTRUCTIONS CAREFULLY BEFORE WIRING UNIT!

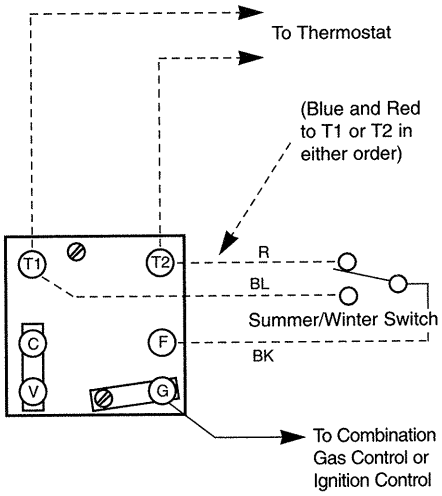

(Figure 1)
Typical Wiring — Summer/Winter Switch

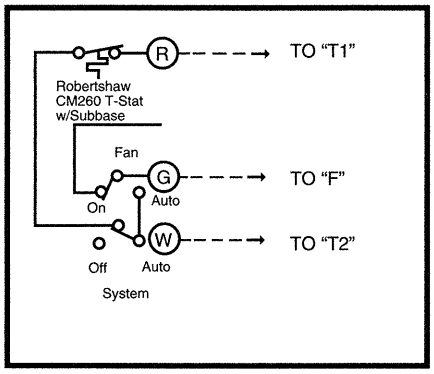

Alternate wiring using Robertshaw CM260 w/SB-3A-1 Sub-base

WIRING INSTRUCTIONS

1. Remove the factory installed bus bar (jumper) from between terminals "T2" and "F" of terminal board.
2. Connect common of summer/winter switch to terminal "F" on terminal board.
3. Connect normally open switch of summer/winter switch to terminal "T1" on terminal board.
4. Connect normally closed switch of summer/winter switch to terminal "T2" on terminal board.
5. Connect thermostat between terminals "T1" and "T2" on terminal board.

CHECK-OUT PROCEDURE

With the power and gas supply turned off, set the thermostat to its lowest setting and place the summer/winter switch to the winter position. After making these adjustments proceed as follows:

1. If the unit has a standing pilot, turn on the gas supply only, and light the pilot according to the instructions on the unit's serial plate, then proceed with Step 2. If the unit is equipped with an intermittent pilot ignition system, turn on gas supply to unit and proceed with Step 2.
2. Turn on power supply to the unit. Nothing should happen.
3. Place the summer/winter switch in the summer position. After a delay of approximately 30 seconds the fan motor should start.
4. While the summer/winter switch is still in the summer position, and with the fan motor running, turn the thermostat up to call for heat. The main burner should now fire.
5. Turn the thermostat down again. The main burner should shut off and the fan motor should continue to run. During this step, allow the fan to run at least 1½ minutes to make sure it will continue running. Modine units are equipped with a fan timed delay relay and the motor will run approximately 1 to 1½ minutes after the fan timer has been de-energized.
6. After ensuring that the fan motor will continue to run in the summer position, and with the thermostat set to its lowest setting, place the summer/winter switch in the winter position and wait for the fan time delay to turn the fan motor off.
7. After the fan motor has stopped, and with the summer/winter switch in the winter position, turn the thermostat up to call for heat. The main burner should fire and after a delay of approximately 30 seconds, the fan motor should run.

If the above sequence of operation does not occur, recheck all wiring until the necessary correction to the wiring is found and corrected. Set the thermostat to the desired set point and place summer/winter switch in desired position. Unit is now ready for use.

NOTE: POWER VENTER ACCESSORY WIRING DIAGRAM USED ON MODELS PAE/BAE. THIS TO BE USED IN CONJUNCTION WITH UNIT WIRING DIAGRAM.

MODELS PAE/BAE
Typical Power Venter Wiring (taken from 6-554.5, page 2)

CAUTION: Before proceeding with wiring the accessories described, make sure the unit has been installed, vented, piped and wired according to the Installation/Service Manual and Standard Wiring Diagram furnished with the unit heater.

WARNING: TURN OFF ALL POWER AND GAS TO UNIT BEFORE WIRING. FAILURE TO WIRE THIS UNIT ACCORDING TO THIS WIRING DIAGRAM MAY RESULT IN INJURY TO THE INSTALLER OR USER — READ INSTRUCTIONS CAREFULLY BEFORE WIRING UNIT!

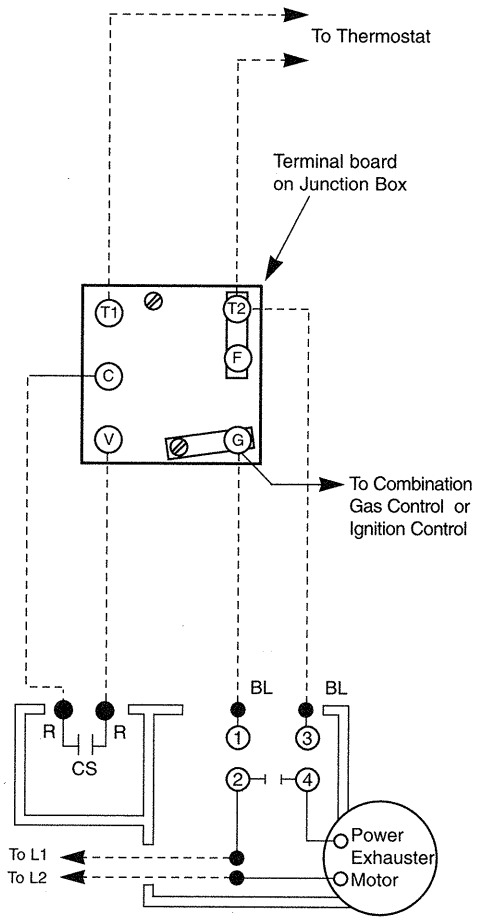

(Figure 2)
Typical Wiring — Power Venter Accessory

WIRING INSTRUCTIONS

1. Remove the factory installed bus bar (jumper) from between terminals "C" and "V" of terminal board.
2. Connect one red lead from centrifugal switch (CS) of power venter to terminal "C" on terminal board. Connect the other red lead from centrifugal switch (CS) to terminal "V" of terminal board.
3. Connect terminal (3) of power venter relay to terminal "T2" of terminal board.
4. Connect terminal (1) of power venter relay to terminal "G" of terminal board.
5. Connect terminal (2) of power venter relay to L1 of power supply in unit junction box.
6. Connect L2 lead from power venter motor to L2 lead of power supply in unit junction box.
7. Connect thermostat between terminals "T1" and "T2" of terminal board.

CHECK-OUT PROCEDURE

With the power and gas supply turned off, set the thermostat to its lowest setting.

1. If the unit has a standing pilot, turn on the gas supply only and light the pilot according to the instructions on the unit's serial plate, then proceed with Step 2. If the unit is equipped with an intermittent pilot ignition system, turn on the gas supply to unit and proceed with Step 2.
2. Turn on power supply to unit. Nothing should happen.
3. Turn up the thermostat to call for heat. The power venter motor should start, the centrifugal switch of the power venter should close, and the main burner should light. After a delay of approximately 30 seconds, the fan motor should start.
4. Turn the thermostat down again. The main burner and power venter motor should shut off. The fan motor should continue to run for approximately 1 to 1½ minutes. Modine units are equipped with a fan delay relay, and the fan motor is delayed for approximately 30 seconds on start-up, and 1 to 1½ minutes on shut-down.
5. Check the power venter centrifugal switch for proper function. To do this, remove the centrifugal switch lead from terminal "V" of the terminal board. Turn up the thermostat to call for heat. The power venter motor should run, but the main burner should not light. After a 30 second delay, the fan motor should operate. The main burner should still not light.
6. Turn down the thermostat and allow the power venter motor and fan motor to stop running. Reconnect the centrifugal switch lead to terminal "V" of the terminal board. Recycle the unit as described in Steps 3 and 4.

If the unit does not operate in the sequence described above, recheck all wiring until the necessary correction to the wiring is found and corrected. Set the thermostat to the desired set point. The unit is now ready for use.

NOTE: COMBINATION SUMMER/WINTER SWITCH AND POWER VENTER USED ON MODELS PAE/BAE. THIS TO BE USED IN CONJUNCTION WITH UNIT WIRING DIAGRAMS.

MODELS PAE/BAE

Combination Summer/Winter Switch and Power Venter Wiring (taken from 6-554.5, page 3)

CAUTION: Before proceeding with wiring the accessories described, make sure the unit has been installed, vented, piped and wired according to the Installation/Service Manual and Standard Wiring Diagram furnished with the unit heater.

WARNING: TURN OFF ALL POWER AND GAS TO UNIT BEFORE WIRING. FAILURE TO WIRE THIS UNIT ACCORDING TO THIS WIRING DIAGRAM MAY RESULT IN INJURY TO THE INSTALLER OR USER — READ INSTRUCTIONS CAREFULLY BEFORE WIRING UNIT!

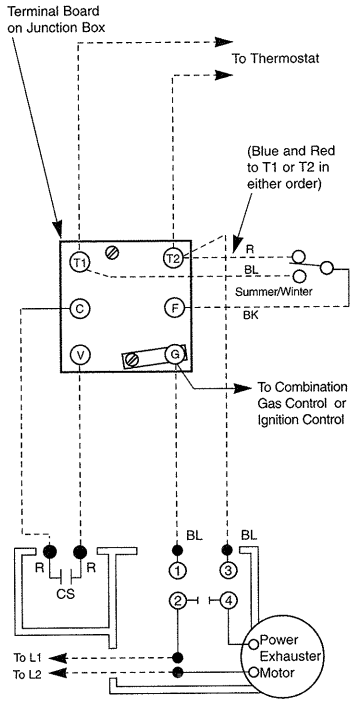

(Figure 3)
Typical Wiring — Combination Power Venter & Summer/Winter Switch

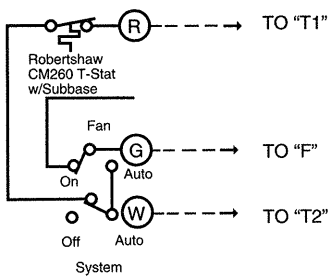

Alternate wiring, using Robertshaw CM260 w/SB-3A Sub-base

WIRING INSTRUCTIONS

1. Remove the factory installed bus bars (jumpers) between terminals "T2" and "F", and between terminals "C" and "V".
2. Connect common of summer/winter switch to terminal "F" of terminal board.
3. Connect normally closed switch of summer/winter switch to terminal "T2" of terminal board.
4. Connect normally open switch of summer/winter switch to terminal "T1" of terminal board.
5. Connect one red lead from centrifugal switch (CS) of power venter to terminal "C" of terminal board, and connect the other red lead from centrifugal switch (CS) to terminal "V" of terminal board.
6. Connect terminal (3) of power venter relay to terminal "T2" of terminal board.
7. Connect terminal (1) of power venter relay to terminal "G" of terminal board.
8. Connect terminal (2) of power venter relay to L1 of power supply in unit junction box.
9. Connect L2 lead from power venter motor to L2 lead of power supply in unit junction box.
10. Connect thermostat between terminals "T1" and "T2" of terminal board.

CHECK-OUT PROCEDURE

With the power and gas supply turned off, set the thermostat to its lowest setting and place the summer/winter switch in the winter position. After making these adjustments, proceed as follows:

1. If the unit has a standing pilot, turn on the gas supply only, and light the pilot according to the instructions on the unit's serial plate, then proceed with Step 2. If the unit is equipped with an intermittent pilot ignition system, turn on gas supply to the unit and proceed with Step 2.
2. Turn on power supply to the unit. Nothing should happen.
3. Place the summer/winter switch in the summer position. After a delay of approximately 30 seconds the fan motor only should start.
4. While the summer/winter switch is still in the summer position, and with the fan motor running, turn the thermostat up to call for heat. The power venter motor should come on, the centrifugal switch should close, and the main burner should light.
5. Turn the thermostat down again. The main burner and power venter motor should shut off, but the fan motor should continue to run. During this step, allow the fan to run at least 1½ minutes to make sure it will continue running. Modine units are equipped with a fan timed delay relay and the motor will run approximatey 1 to 1½ minutes after the fan timer has been de-energized.
6. After ensuring that the fan will continue to run in the summer position, and with the thermostat set at its lowest setting, place the summer/winter switch in the winter position and wait for the fan time delay to turn the fan motor off.
7. After the fan motor has stopped, and with the summer/winter switch in the winter position, turn the thermostat up to call for heat. The power venter should start, the centrifugal switch should close and the main burner should light. After a delay of approximately 30 seconds fan motor should run.
8. Turn the thermostat down again. The main burner and power venter motor should shut off. The fan motor should continue to run for approximately 1 to 1½ minutes and then shut off.
9. Check the power venter centrifugal switch for proper function. To do this, remove the centrifugal switch lead from terminal "V" of the terminal board. Turn up the thermostat to call for heat. The power venter motor should run, but the main burner should not light. After a 30 second delay, the fan motor should operate. The main burner should still not light.
10. Turn down the thermostat and allow the power venter motor and fan motor to stop running. Reconnect the centrifugal switch lead to terminal "V" of the terminal board. Recycle the unit as described in Steps 7 and 8.

If the unit does not operate in the sequence described above, recheck all of the wiring until the necessary correction to the wiring is found and corrected. Set the thermostat to the desired set point and switch the summer/winter switch to the desired position. The unit is now ready for use.

NOTE: ENERGY SAVER ACCESSORY (PART NO. 79200) WIRING DIAGRAM USED ON MODELS PAE/BAE. THIS TO BE USED IN CONJUNCTION WITH UNIT WIRING DIAGRAM.

MODELS PAE/BAE
Typical Energy Saver Kit Wiring (taken from 75-507.4)

CAUTION: Before proceeding with wiring the accessories described, make sure the unit has been installed, vented, piped and wired according to the Installation/Service Manual and Standard Wiring Diagram furnished with the unit heater.

WARNING: TURN OFF ALL POWER AND GAS TO UNIT BEFORE WIRING. FAILURE TO WIRE THIS UNIT ACCORDING TO THIS WIRING DIAGRAM MAY RESULT IN INJURY TO THE INSTALLER OR USER — READ INSTRUCTIONS CAREFULLY BEFORE WIRING UNIT!

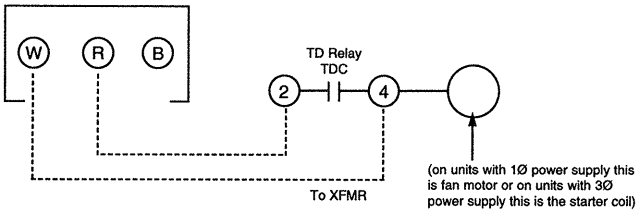

(Figure 4)
Typical Wiring — Energy Saver Kit

WIRING INSTRUCTIONS

1. Connect "R" of controller to fan-timer contact terminal #2.
2. Connect "W" of controller to fan-timer contact terminal #4.
3. Follow operational check-out.

OPERATIONAL CHECK

1. Set room thermostat to its lowest setting and restore power supply to unit heater.
2. Turn the adjustment knob of the thermostat to move the temperature dial across the indicator and back again. When the control is wired for ventilating application (R to W), turning the dial clockwise to a lower setting simulates a rise in temperature and only the unit heater fan should come on. If the wiring is correct, the controlled equipment will switch on and off as the temperature dial indicates the approximate space temperature.
3. If the controlled equipment does not start and stop as the thermostat dial is turned, disconnect the power supply and check the wiring and terminal connections.
4. If the controlled equipment operates opposite to the sequence desired, shut off the power and check for reversed leads on the switch.
5. After checkout, reset room thermostat to desired comfort level. Set energy-saver control 3 to 6 degrees above room thermostat (depending on mounting height, room conditions, etc.) for ceiling air circulation.

For SERVICE contact your local qualified installation and service contractor or appropriate utility company

MODINE

Heating Division
Modine Manufacturing Company
1500 DeKoven Avenue
Racine, Wisconsin 53403-2552
Phone: 1-800-828-4328 (HEAT)
Fax: 414-636-1665

© Modine Manufacturing Company 1997

6-443

C11/97 - 2.5M Litho in USA