November, 1997

WIRING DIAGRAMS
Models PV/BV gas-fired unit heaters

(manufactured after April, 1994)

Diagram Selection

Diagrams are provided for both single- and three-phase circuits, and are readily identified in the Selection Table on the following page. The Selection Table enables easy selection of the correct wiring diagram after the electrical components of the unit heater have been determined. The control codes are listed to aid in locating the correct diagram.

Diagram Interchangeability

The following gas-fired unit heater wiring diagrams are for either 115-volt, 60-Hertz, single-phase power, or for 230-volt, 575-volt, 60 Hertz, three-phase electrical service.

The 115v/60Hz/1ϕ diagrams may also be utilized for 230v/60Hz/1ϕ by substituting 230-volt components in the 115-volt shown.

The 230v/60Hz/3ϕ diagrams may be modified to 460v/60Hz/3ϕ by adding a 460v to 230v step down transformer and wiring the unit as shown in the wiring “inset” on all 3-phase wiring diagrams.

The 460v/60Hz/3ϕ diagrams may be modified to 575v/60Hz/3ϕ by adding a 575v to 230v transformer and wiring the unit as shown in the wiring “inset” on all 3 phase diagrams.

NOTE: As indicated in every diagram, all wiring must comply with the national electrical code and all local codes. All components must agree with their respective power source.

CAUTION

Turn off all power and gas to unit before wiring. Failure to wire this unit according to the specified wiring diagram may result in injury to the installer or user. For deviations, contact factory.

Abbreviations and Symbols

To facilitate interpretation and enable simplification the abbreviations and symbols have been selected as recommended by ANSI (American National Standards Institute) and NEMA (National Electrical Manufacturers Association) standards.

XFMR or TR	Transformer
V	Volts
Hz	Cycle or Hertz
ϕ	Phase
LC	Limit Control
THERM or TH	Thermostat
MV	Main Valve
PV	Pilot Valve
SO	Shut Off
RC	Relay Contact or Coil
G	Ground
H	Hot
SW	Switch
EPS	Electric Pilot Switch
HI	High
Lo	Low
C	Common
“J” Box	Junction Box
H1, H2, etc.	Transformer Primary Terminals
SUM	Summer Contact (Summer/Winter Switch)
WIN	Winter Contact (Summer/Winter Switch)
S-W	Summer/Winter Switch
O.L.C.	Overload Contact
C.S.	Power Venter Centrifugal Switch
FTc	Fan Timer Contact
SPDT	Single-Pole Double-Throw Switch
VA	Volt-Ampere
W	Watts

WIRE COLOR CODING

BK	Black
BL	Blue
R	Red
W	White
Y	Yellow
X1, X2, etc.	Transformer Secondary Terminals
L1, L2, etc.	Electric Load Terminals
T1, T2, etc.	Starter or Motor Terminals

MOTOR DATA

Table 1
Power Code Description — Propeller PV Models

Power Code	Electric Power	PV 30	PV 50	PV 75	PV 100	PV 125	PV 145	PV 175	PV 200	PV 250	PV 300	PV 350	PV 400
		Horsepower											
01	115/60/1	1/40	1/40	1/30	1/30	1/15	1/6	1/6	1/6	1/3	1/3	3/4	3/4
02	230/60/1	1/40	1/40	1/15	1/15	1/15	1/6	1/6	1/6	1/3	1/3	3/4	3/4
04	200/60/3	–	–	–	–	1/3	1/3	1/3	1/3	1/3	1/3	3/4	3/4
05	230/460/60/3	–	–	–	–	1/3	1/3	1/3	1/3	1/3	1/3	3/4	3/4

Table 2
Motor Data and Unit Power Requirement — Propeller PV Models

Voltage	115/60/1				230/60/1				200/60/3				230/460/60/3			
HP	Mtr. Amps	Mtr. Rpm	Total Amps	Total Watts	Mtr. Amps	Mtr. Rpm	Total Amps	Total Watts	Mtr. Amps	Mtr. Rpm	Total Amps	Total Watts	Mtr. Amps	Mtr. Rpm	Total Amps	Total Watts
1/40	1.0	1550	2.7	175	0.5	1550	1.3	175	–	–	–	–	–	–	–	–
1/30	2.1	1050	3.7	240	–	–	–	–	–	–	–	–	–	–	–	–
1/15	2.4	1050	4.1	285	1.3	1050	2.2	285	–	–	–	–	–	–	–	–
1/6	2.8	1075	5.1	440	1.6	1075	2.8	360	–	–	–	–	–	–	–	–
1/3	5.4	1075	7.7	665	2.5	1075	3.9	585	1.9	1140	3.3	615	2.1/1.1	1140	3.4/1.7	615
3/4	8.8	1075	11.1	1050	4.4	1075	5.7	1000	3.7	1140	4.9	1020	3.4/1.7	1140	5.0/2.5	1020

Table 3
Motor Data and Unit Power Requirements — Blower BV Models

Voltage	115/60/1				230/60/1				200/60/3				230/460/60/3				575/60/3			
HP	Mtr. Amps	Mtr. Rpm	Total Amps	Total Watts	Mtr. Amps	Mtr. Rpm	Total Amps	Total Watts	Mtr. Amps	Mtr. Rpm	Total Amps	Total Watts	Mtr. Amps	Mtr. Rpm	Total Amps	Total Watts	Mtr. Amps	Mtr. Rpm	Total Amps	Total Watts
1/4	5.4	1725	7.7	570	2.7	1725	4.0	520	1.6	1725	2.8	500	1.4/0.7	1725	2.7/1.4	500	0.6	1725	1	500
1/3	5.0	1725	6.9	565	2.5	1725	3.6	515	1.8	1725	3.0	530	1.6/0.8	1725	2.9/1.5	530	0.7	1725	1.2	530
1/2	8.5	1725	10.8	780	3.8	1725	5.1	730	2.5	1725	3.7	730	2.6/1.3	1725	3.9/2.0	730	1	1725	1.4	730
3/4	11.0	1725	13.3	1050	5.5	1725	6.8	1000	3.2	1725	4.4	970	3.0/1.5	1725	4.3/2.2	970	1.2	1725	1.6	970
1	13.4	1725	15.7	1260	6.7	1725	8.0	1210	4.0	1725	5.2	1230	3.8/1.9	1725	5.1/2.6	1230	1.6	1725	2	1230
1-1/2	15.0	1725	17.6	1740	7.5	1725	8.9	1690	5.6	1725	6.8	1630	5.2/2.6	1725	6.5/3.3	1630	2	1725	2.4	1630
2	–	–	–	–	–	–	–	–	6.8	1725	8.1	2080	6.6/3.3	1725	7.9/4.0	2080	2.4	1725	2.8	2080
3	–	–	–	–	–	–	–	–	10.6	1725	11.8	3430	8.8/4.4	1725	10.1/5.1	3430	4.1	1725	4.5	3430
5	–	–	–	–	–	–	–	–	14.3	1725	15.5	4530	13.2/6.6	1725	14.5/7.3	4530	5.3	1725	5.7	4530

WIRING DIAGRAM SELECTION

Wiring Diagram Selection

A. Field and Submittal Wiring Diagram Selection

Wiring in the field changes little when the brand of the controls furnished on the unit heater changes. Select correct wiring diagrams as follows:

1. Determine unit heater model and size.
2. Select control code number from Table 4.
3. Reference unit heater model in the Page Location Index with control code number and determine correct page number for single-phase or three-phase control. Single-phase wiring diagram page numbers are in the upper left of box and three-phase diagrams are in the lower right of box.
4. Wiring diagrams for unit heat accessories are listed in Table 5. Use the accessory diagrams along with the unit wiring diagrams for complete wiring instructions.

B. Service and Troubleshooting

Because internal or factory wiring may vary depending on controls manufacturer, the wiring diagrams must be selected with the series identity number when servicing or troubleshooting unit heater control system. Wiring diagrams in this bulletin are for unit heaters manufactured after April 1995. The series identity number is the 5th through the 7th digits of the unit heater serial number.

EXAMPLE: Serial no. — 1510<u>101</u>0495-0098 has a series identity number of 101.

To select the correct wiring diagram:

1. Determine unit heater model and size from serial plate located on the side of the unit.
2. Determine the control code numbers from box marked *Control Code*, also on the serial plate.
3. Determine the *series identity number* of the unit heater, then proceed with Step 3 of Field and Submittal Wiring Diagram Selection.

Example Selection

Select correct single-phase wiring diagram for a PV 175A Control Code 11, series identity number 101.

Locate the page which shows the wiring diagram number for PV and BV units with series identity number 101 (see page iii). Select the page number where the column for the PV 175 intersects with the line for control code 11. The correct wiring diagram can be found on page 9 as shown in the upper left hand corner of box. If this unit also had a summer/winter switch, the accessory wiring diagram found on page C-1 as per Table 5 would also be required for complete wiring information.

Two-in-One Diagrams

Two wiring diagrams are furnished for each circuit configuration in this manual. Included are a connection diagram at the left for field installation and circuit schematic at the right to aid in continuity and troubleshooting.

The heavier lines in the connection diagram indicate line voltage; the lighter lines indicate low voltage. Solid lines show pre-wiring performed at the factory; dotted lines inform the installer of connections required to put the heater in operation.

Table 4
Control Code Descriptions

Control Code Number	Description
11, 12, 13, 14	Single-stage, Standing pilot, 100% shut-off, Natural gas.
30, 31, 32, 33	Single-stage, Intermittent pilot ignition, 100% shut-off with continuous retry, Natural gas.
59, 60	Mechanical modulation with automatic pilot ignition, 100% shut-off with continuous retry, Natural gas, BV only.
63, 64	Two-stage, Intermittent pilot ignition, 100% shut-off continuous retry, Natural gas.
81, 82, 91, 92	Single-stage, Standing pilot, 100% shut-off, Propane gas.
85, 86, 93, 94	Single-stage, Intermittent pilot ignition, 100% shut-off with continuous retry, Propane gas.
87, 88	Two-stage, Intermittent pilot ignition, 100% shut-off with continuous retry, Propane gas.
89, 90	Mechanical modulation with automatic pilot ignition, 100% shut-off with continuous retry, Propane gas, BV only.

Table 5
Accessory Wiring Diagram Page Location Index ①

Page	Accessory
C-1	Summer/winter switch
C-2	Energy-saver kit

① See paragraph A, step 4 under “wiring diagram selection”.

WIRING DIAGRAM SELECTION

Series Identity 101

Table 6
Models PV or BV Page Location Index ①

Control Code	Model Size											
	30	50	75	100	125	150	175	200	250	300	350	400
11 or 12	9 / 10	9 / 10	9 / 10	9 / 10	9 / 10	9 / 10	9 / 10	9 / 10	9 / 10	9 / 10	11 / 12	11 / 12
13 or 14		18	18	18	18	18	18	18	18	18	19	19
30 or 31	13 / 14	13 / 14	13 / 14	13 / 14	13 / 14	13 / 14	13 / 14	13 / 14	13 / 14	13 / 14	13 / 14	13 / 14
32 or 33		20	20	20	20	20	20	20	20	20	20	20
59 or 60		3 / 4	3 / 4	3 / 4	3 / 4	3 / 4	3 / 4	3 / 4				
63 or 64	1 / 2	1 / 2	1 / 2	1 / 2	1 / 2	1 / 2	1 / 2	1 / 2	1 / 2	1 / 2	1 / 2	1 / 2
81 or 82	9 / 10	9 / 10	9 / 10	9 / 10	9 / 10	9 / 10	9 / 10	9 / 10	9 / 10	9 / 10	11 / 12	11 / 12
85 or 86	13 / 14	13 / 14	13 / 14	13 / 14	13 / 14	13 / 14	13 / 14	13 / 14	13 / 14	13 / 14	13 / 14	13 / 14
87 or 88	1 / 2	1 / 2	1 / 2	1 / 2	1 / 2	1 / 2	1 / 2	1 / 2	1 / 2	1 / 2	1 / 2	1 / 2
89 or 90			3 / 4	3 / 4	3 / 4	3 / 4	3 / 4	3 / 4				
91 or 92		18	18	18	18	18	18	18	18	18	19	19
93 or 94		20	20	20	20	20	20	20	20	20	20	20

Series Identity 102

Table 7
Models PV or BV Page Location Index ①

Control Code	Model Size											
	30	50	75	100	125	150	175	200	250	300	350	400
11 or 12	9 / 10	9 / 10	9 / 10	9 / 10	9 / 10	9 / 10	9 / 10	9 / 10	9 / 10	9 / 10	11 / 12	11 / 12
13 or 14		18	18	18	18	18	18	18	18	18	19	19
30 or 31	7 / 8	7 / 8	7 / 8	7 / 8	7 / 8	7 / 8	7 / 8	7 / 8	7 / 8	7 / 8	7 / 8	7 / 8
32 or 33												
59 or 60			5 / 6	5 / 6	5 / 6	5 / 6	5 / 6	5 / 6	5 / 6	5 / 6	5 / 6	5 / 6
63 or 64	21 / 22	21 / 22	21 / 22	21 / 22	21 / 22	21 / 22	21 / 22	21 / 22	21 / 22	21 / 22	21 / 22	21 / 22
81 or 82	9 / 10	9 / 10	9 / 10	9 / 10	9 / 10	9 / 10	9 / 10	9 / 10	9 / 10	9 / 10	11 / 12	11 / 12
85 or 86	7 / 8	7 / 8	7 / 8	7 / 8	7 / 8	7 / 8	7 / 8	7 / 8	7 / 8	7 / 8	7 / 8	7 / 8
87 or 88	21 / 22	21 / 22	21 / 22	21 / 22	21 / 22	21 / 22	21 / 22	21 / 22	21 / 22	21 / 22	21 / 22	21 / 22
89 or 90					5 / 6	5 / 6	5 / 6	5 / 6	5 / 6	5 / 6	5 / 6	5 / 6
91 or 92		18	18	18	18	18	18	18	18	18	19	19
93 or 94		17	17	17	17	17	17	17	17	17	17	17

① Cell format represents single or three phase power as shown in the following example.

1Ph / 3Ph

WIRING DIAGRAM SELECTION

Series Identity 103

Table 8
Models PV or BV Page Location Index ①

Control Code	Model Size											
	30	50	75	100	125	150	175	200	250	300	350	400
11 or 12		29 / 30	29 / 30	29 / 30	29 / 30	29 / 30	29 / 30	29 / 30	29 / 30	29 / 30	31 / 32	31 / 32
13 or 14		38	38	38	38	38	38	38	38	38	39	39
30 or 31	15 / 16	15 / 16	15 / 16	15 / 16	15 / 16	15 / 16	15 / 16	15 / 16	15 / 16	15 / 16	15 / 16	15 / 16
32 or 33		17	17	17	17	17	17	17	17	17	17	17
59 or 60		23 / 24	23 / 24	23 / 24	23 / 24	23 / 24	23 / 24	23 / 24				
63 or 64												
81 or 82		29 / 30	29 / 30	29 / 30	29 / 30	29 / 30	29 / 30	29 / 30	29 / 30	29 / 30	31 / 32	31 / 32
85 or 86	15 / 16	15 / 16	15 / 16	15 / 16	15 / 16	15 / 16	15 / 16	15 / 16	15 / 16	15 / 16	15 / 16	15 / 16
87 or 88												
89 or 90			23 / 24	23 / 24	23 / 24	23 / 24	23 / 24	23 / 24				
91 or 92		38	38	38	38	38	38	38	38	38	39	39
93 or 94		40	40	40	40	40	40	40	40	40	40	40

Series Identity 104

Table 9
Models PV or BV Page Location Index ①

Control Code	Model Size											
	30	50	75	100	125	150	175	200	250	300	350	400
11 or 12	29 / 30	29 / 30	29 / 30	29 / 30	29 / 30	29 / 30	29 / 30	29 / 30	29 / 30	29 / 30	31 / 32	31 / 32
13 or 14		38	38	38	38	38	38	38	38	38	39	39
30 or 31		33 / 34	33 / 34	33 / 34	33 / 34	33 / 34	33 / 34	33 / 34	33 / 34	33 / 34	33 / 34	33 / 34
32 or 33		40	40	40	40	40	40	40	40	40	40	40
59 or 60			25 / 26	25 / 26	25 / 26	25 / 26	25 / 26	25 / 26	25 / 26	25 / 26	25 / 26	25 / 26
63 or 64												
81 or 82	29 / 30	29 / 30	29 / 30	29 / 30	29 / 30	29 / 30	29 / 30	29 / 30	29 / 30	29 / 30	31 / 32	31 / 32
85 or 86		33 / 34	33 / 34	33 / 34	33 / 34	33 / 34	33 / 34	33 / 34	33 / 34	33 / 34	33 / 34	33 / 34
87 or 88												
89 or 90					25 / 26	25 / 26	25 / 26	25 / 26	25 / 26	25 / 26	25 / 26	25 / 26
91 or 92		38	38	38	38	38	38	38	38	38	39	39
93 or 94		37	37	37	37	37	37	37	37	37	37	37

① Cell format represents single or three phase power as shown in the following example.

1Ph / 3Ph

WIRING DIAGRAM SELECTION

Series Identity 105

Table 10
Models PV or BV Page Location Index ①

Control Code	Model Size											
	30	50	75	100	125	150	175	200	250	300	350	400
11 or 12												
13 or 14												
30 or 31	27 / 28	27 / 28	27 / 28	27 / 28	27 / 28	27 / 28	27 / 28	27 / 28	27 / 28	27 / 28	27 / 28	27 / 28
32 or 33		37	37	37	37	37	37	37	37	37	37	37
59 or 60												
63 or 64												
81 or 82												
85 or 86	27 / 28	27 / 28	27 / 28	27 / 28	27 / 28	27 / 28	27 / 28	27 / 28	27 / 28	27 / 28	27 / 28	27 / 28
87 or 88												
89 or 90												
91 or 92												
93 or 94												

Series Identity 106

Table 11
Models PV or BV Page Location Index ①

Control Code	Model Size											
	30	50	75	100	125	150	175	200	250	300	350	400
11 or 12												
13 or 14												
30 or 31	35 / 36	35 / 36	35 / 36	35 / 36	35 / 36	35 / 36	35 / 36	35 / 36	35 / 36	35 / 36	35 / 36	35 / 36
32 or 33												
59 or 60												
63 or 64												
81 or 82												
85 or 86	35 / 36	35 / 36	35 / 36	35 / 36	35 / 36	35 / 36	35 / 36	35 / 36	35 / 36	35 / 36	35 / 36	35 / 36
87 or 88												
89 or 90												
91 or 92												
93 or 94												

① Cell format represents single or three phase power as shown in the following example.

1Ph / 3Ph

6-440.2 – WIRING DIAGRAMS MODELS PV/BV

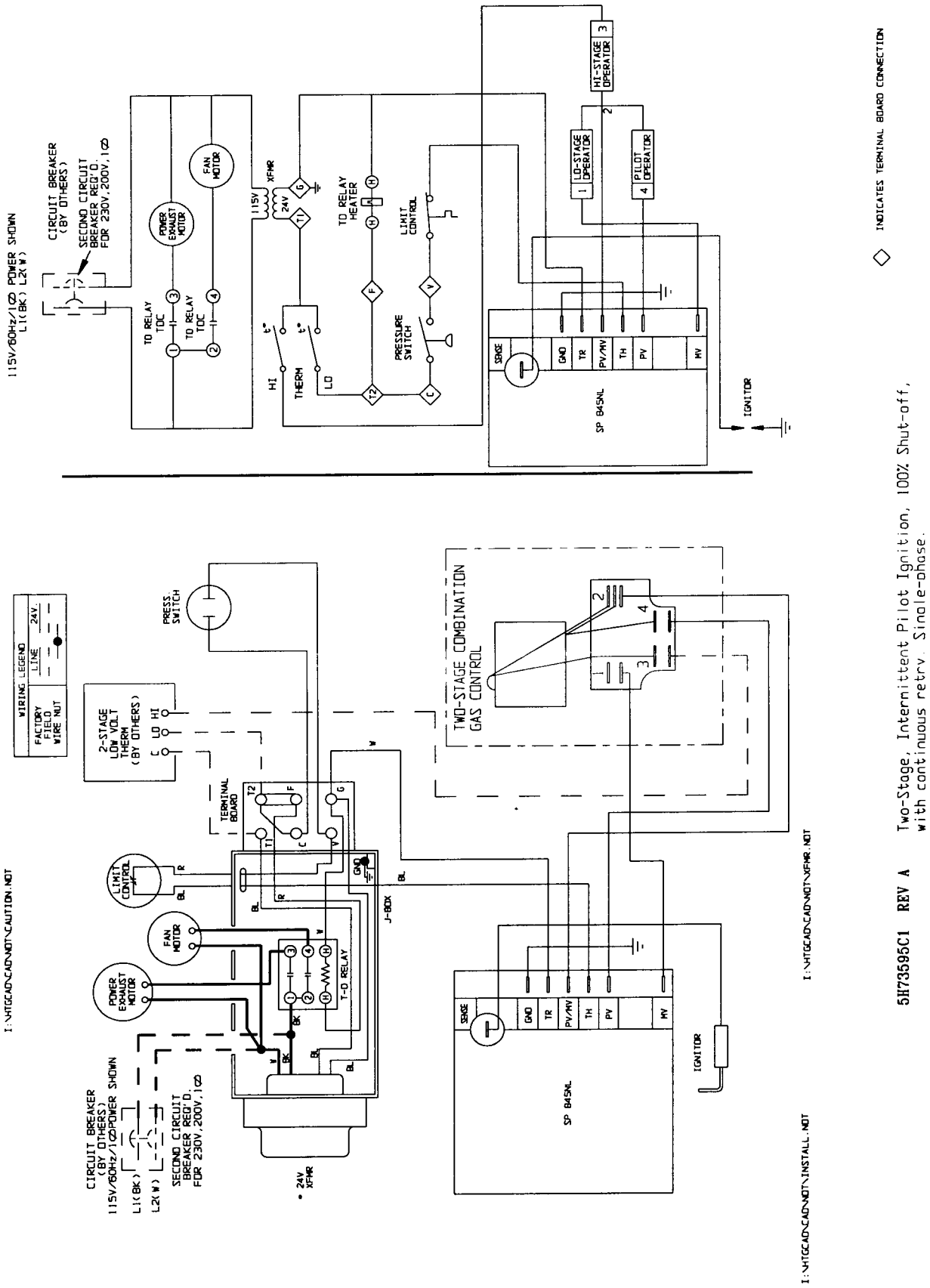

Single Phase — 5H73595C1 Rev A

6-440.2 – WIRING DIAGRAMS MODELS PV/BV

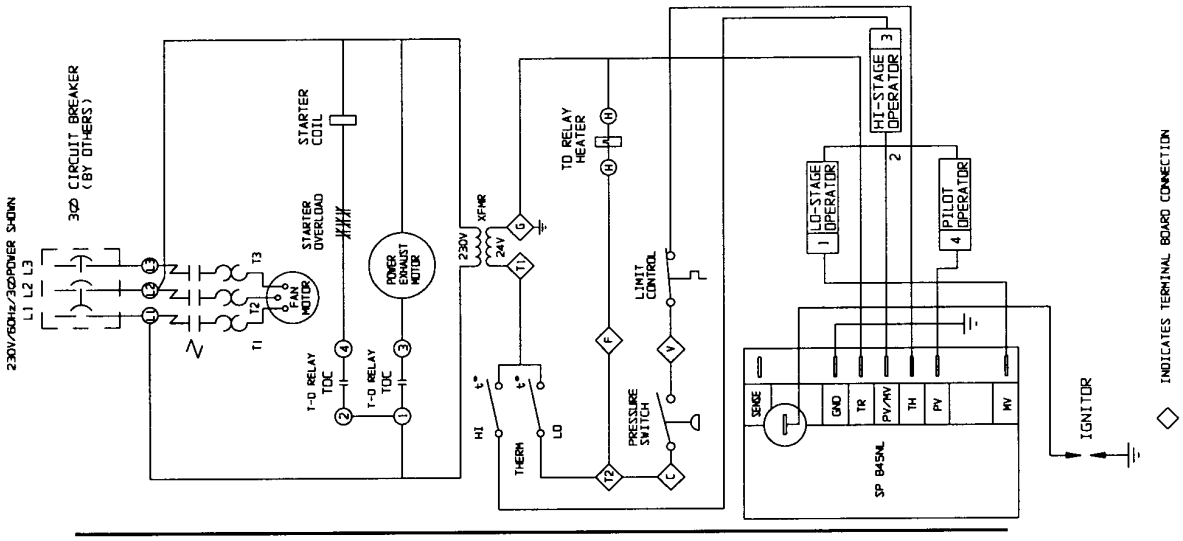

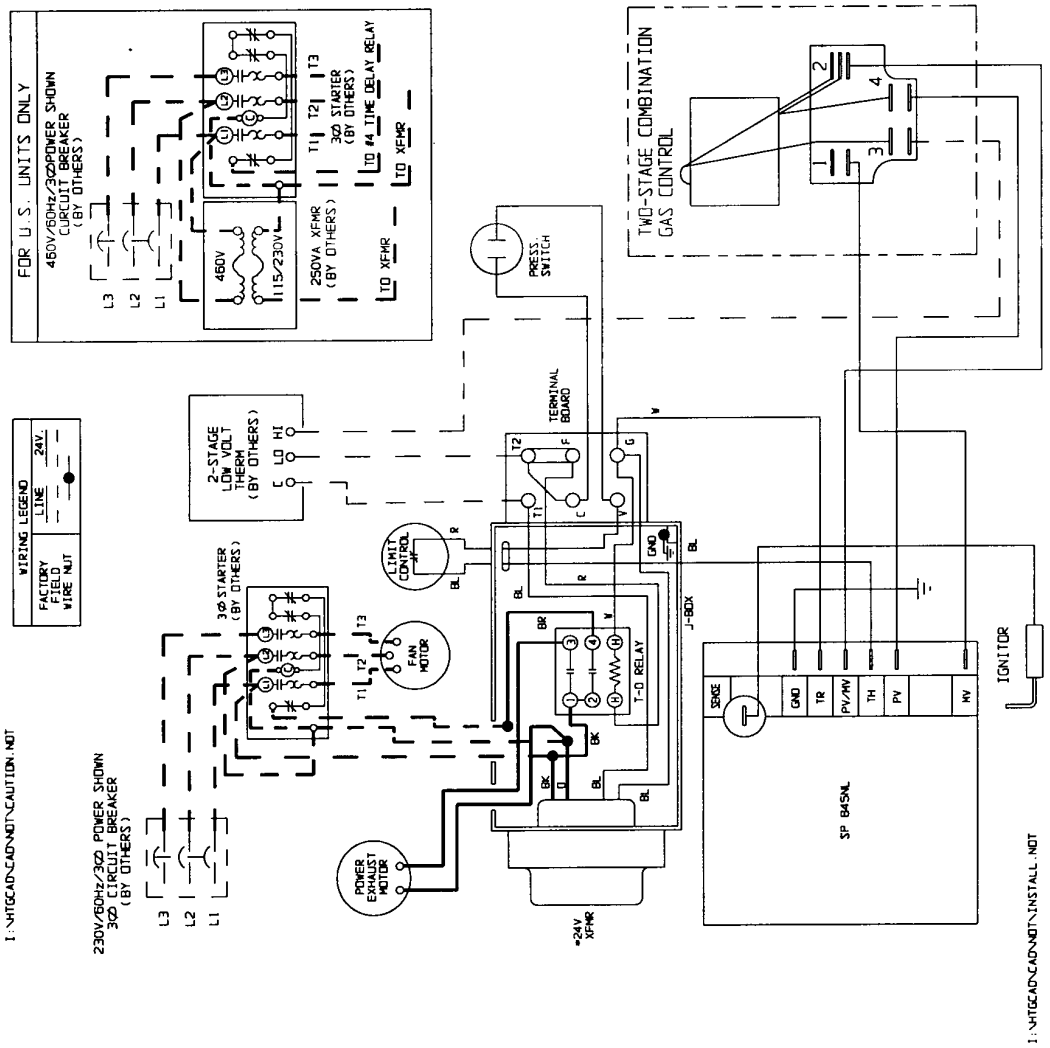

5H73595C1 REV A Two-Stage, Intermittent Pilot Ignition, 100% Shut-off, with continuous retry, Three-phase.

Three Phase — 5H73595C1 Rev A

6-440.2 – WIRING DIAGRAMS MODELS PV/BV

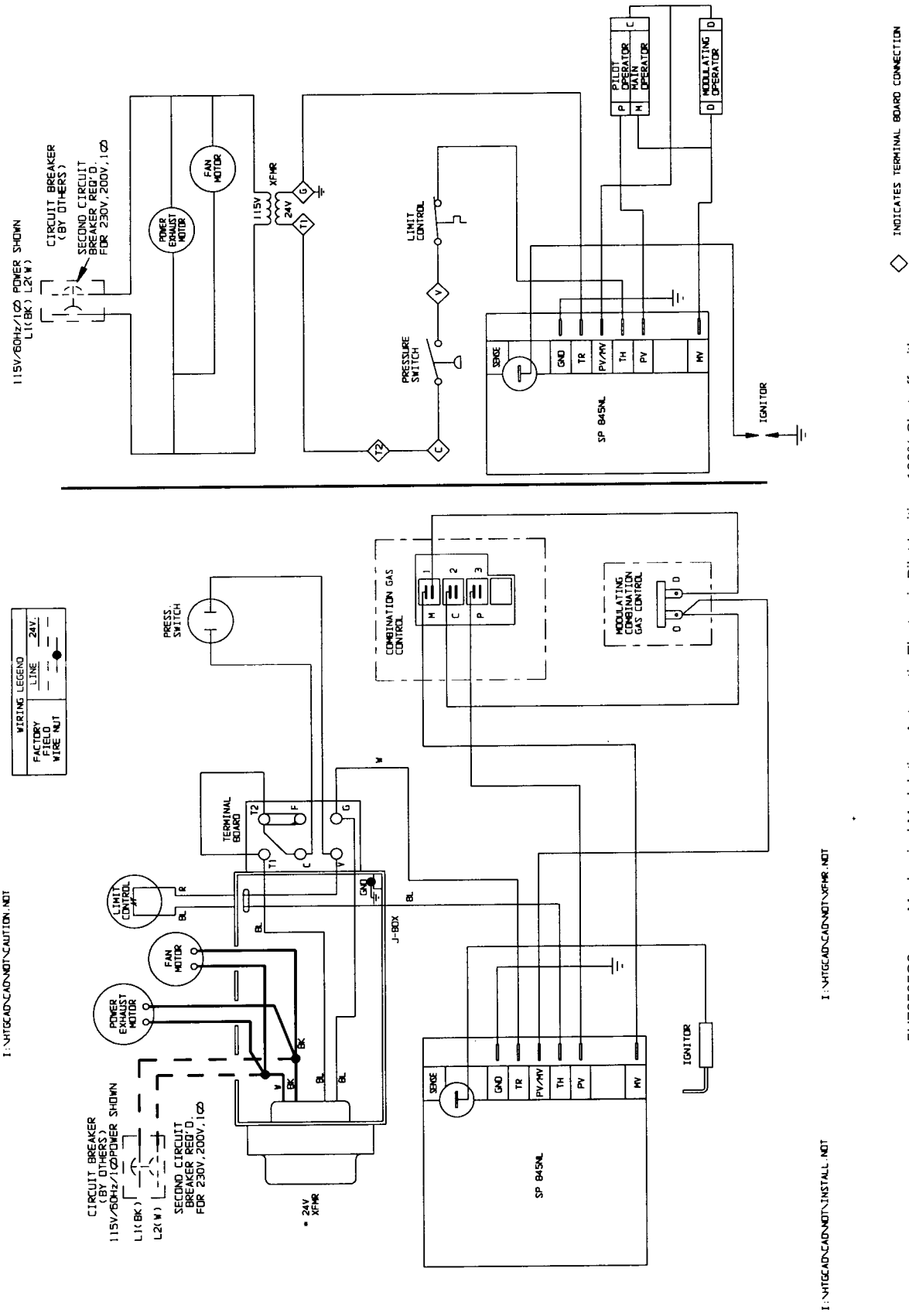

5H73595C2 Mechanical Modulation, Automatic Electronic Pilot Ignition, 100% Shut-off, with continuous retry, Single-phase.

Single Phase — 5H73595C2 Rev A

6-440.2 – WIRING DIAGRAMS MODELS PV/BV

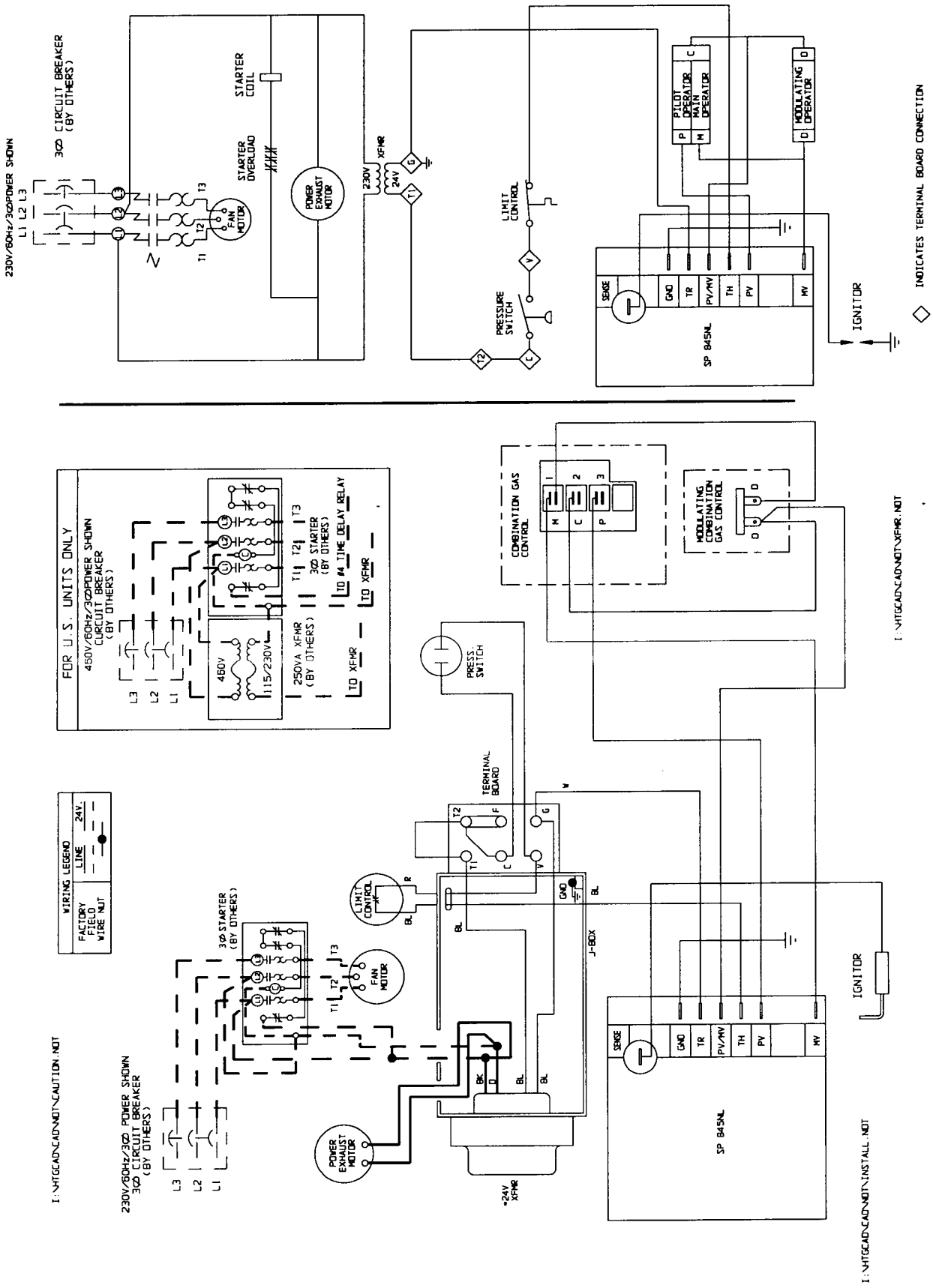

5H73595C2 Rev. A Mechanical Modulation, Automatic Electronic Pilot Ignition, 100% Shut-off with continuous retry, Three-phase.

Three Phase — 5H73595C2 Rev A

6-440.2 – WIRING DIAGRAMS MODELS PV/BV

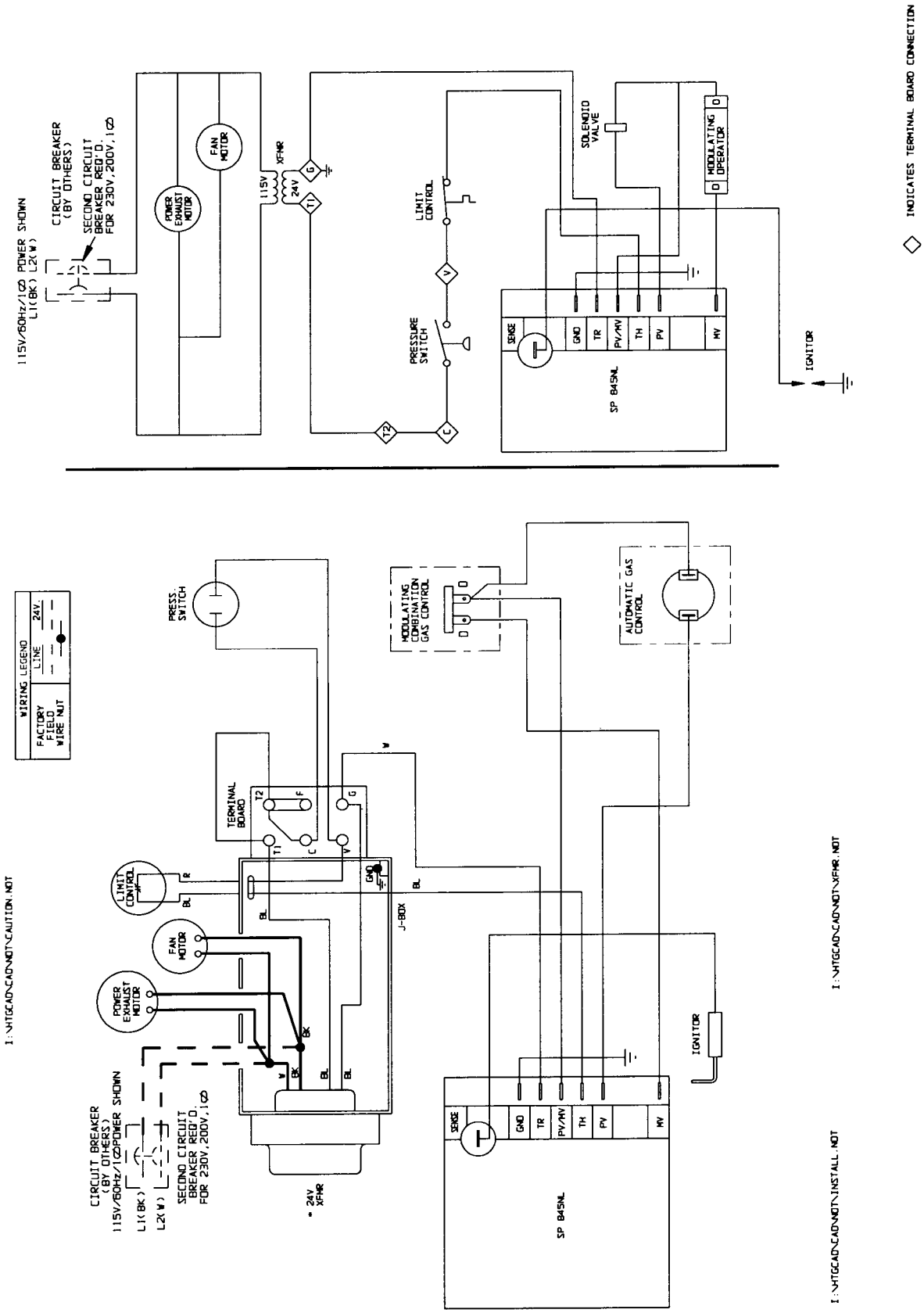

5H73595C3 Rev A Mechanical Modulation, Automatic Electronic Pilot Ignition with continuous retry, Single-phase.

Single Phase — 5H73595C3 Rev A

6-440.2 – WIRING DIAGRAMS MODELS PV/BV

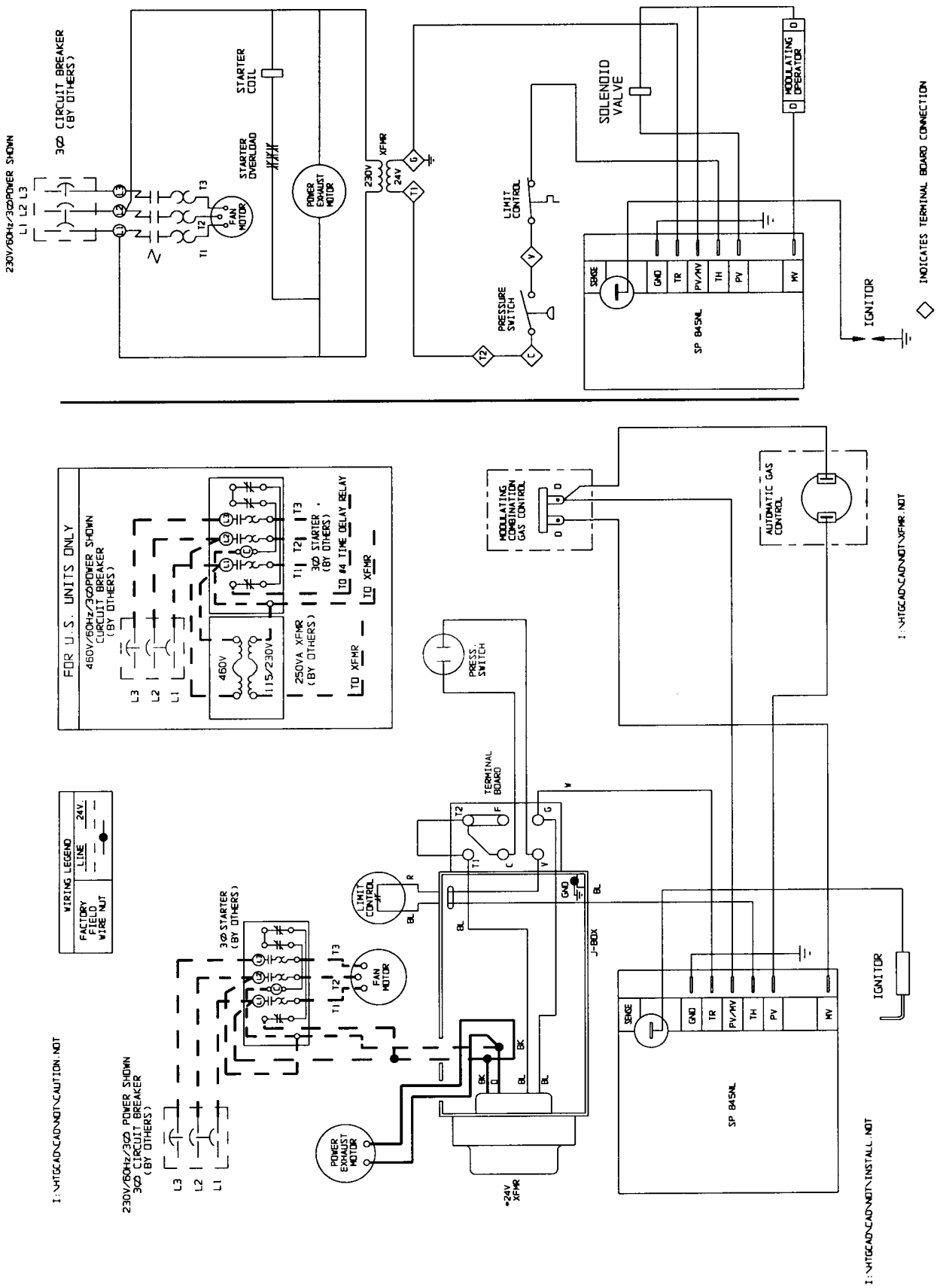

5H73595C3 Rev A Mechanical Modulation, Automatic Electronic Pilot Ignition with continuous retry, Three-phase.

Three Phase — 5H73595C3 Rev A

6-440.2 – WIRING DIAGRAMS MODELS PV/BV

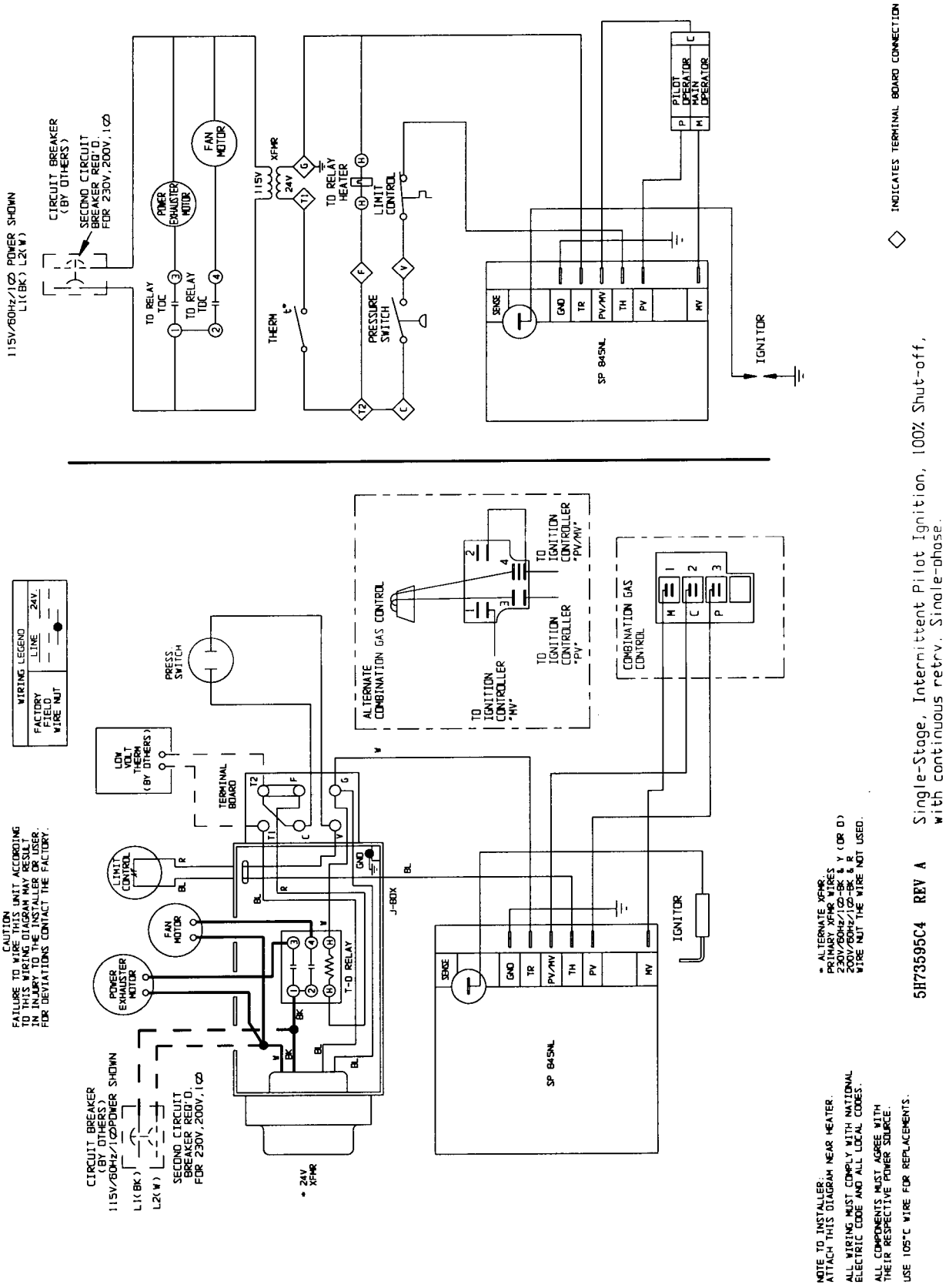

Single Phase — 5H73595C4 Rev A

6-440.2 – WIRING DIAGRAMS MODELS PV/BV

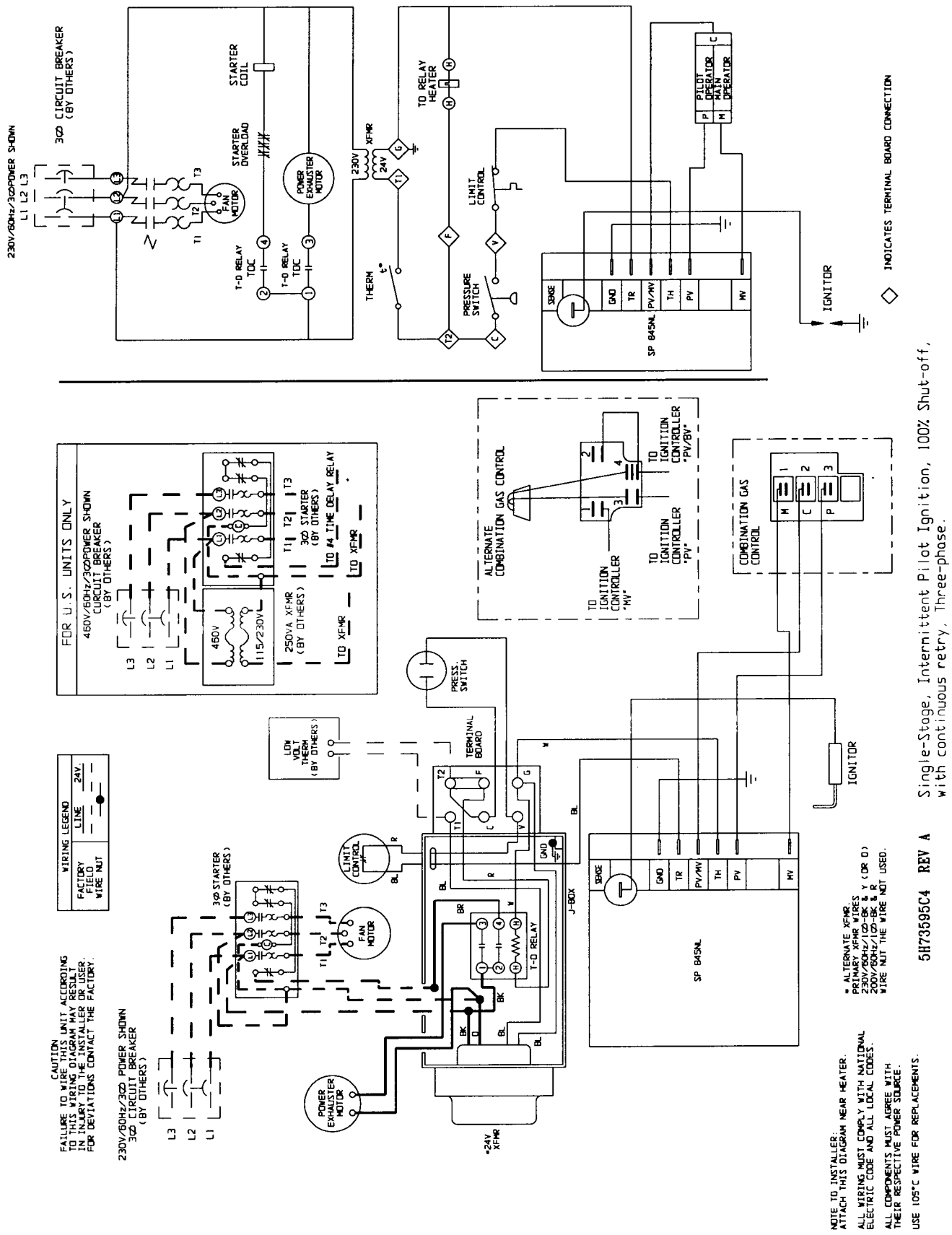

Three Phase — 5H73595C4 Rev A

6-440.2 – WIRING DIAGRAMS MODELS PV/BV

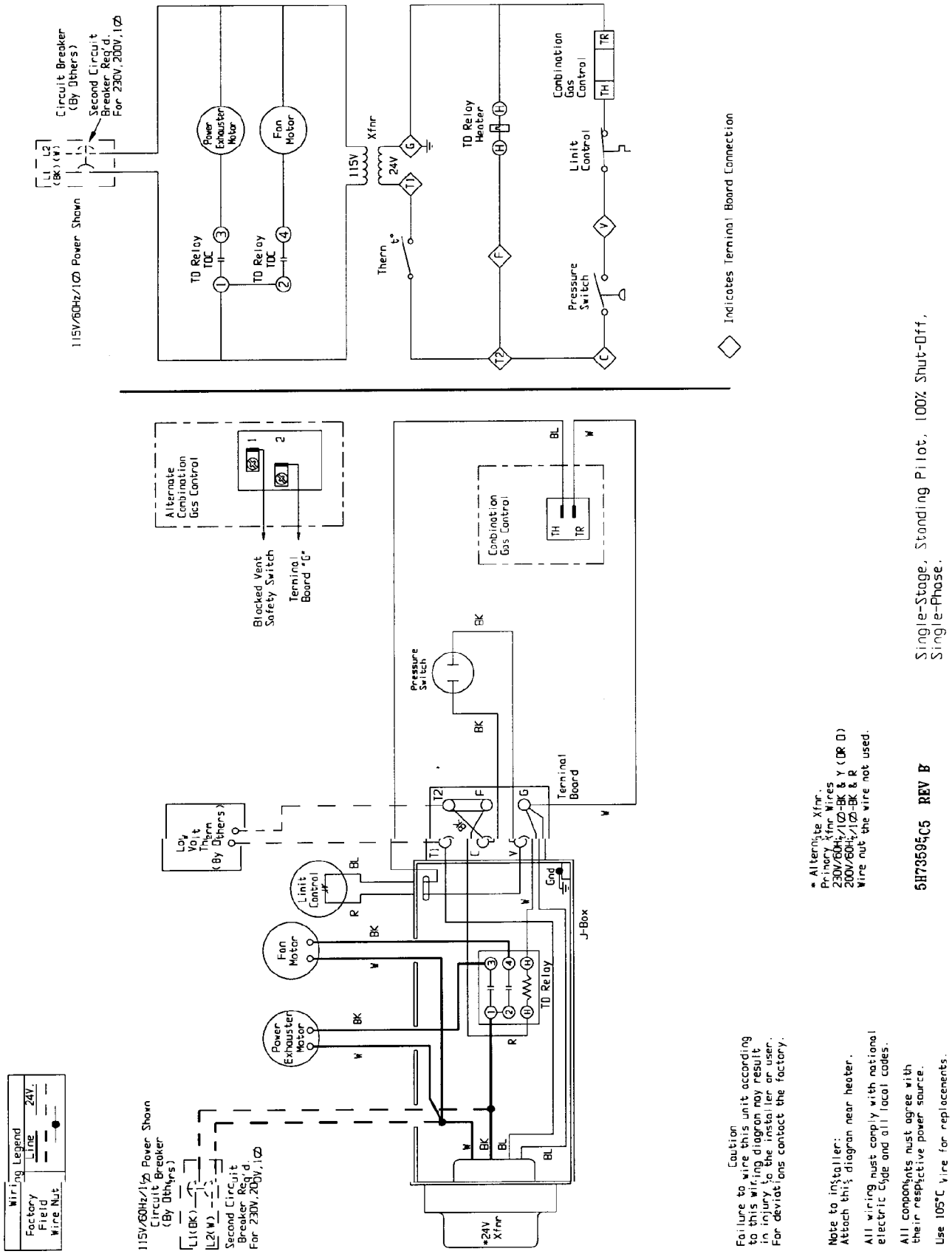

Single Phase — 5H73595C5 Rev B

6-440.2 – WIRING DIAGRAMS MODELS PV/BV

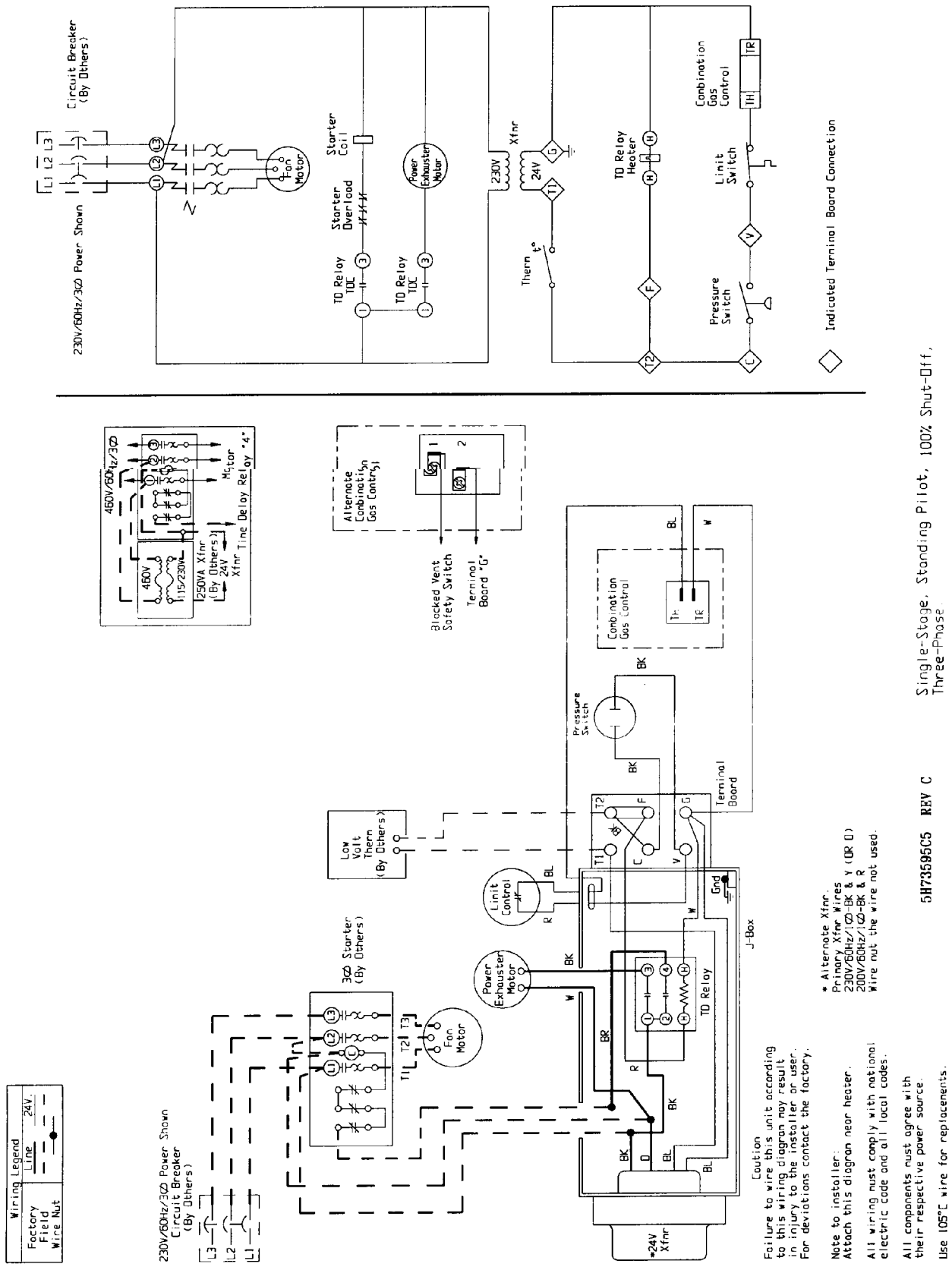

Three Phase — 5H73595C5 Rev C

6-440.2 – WIRING DIAGRAMS MODELS PV/BV

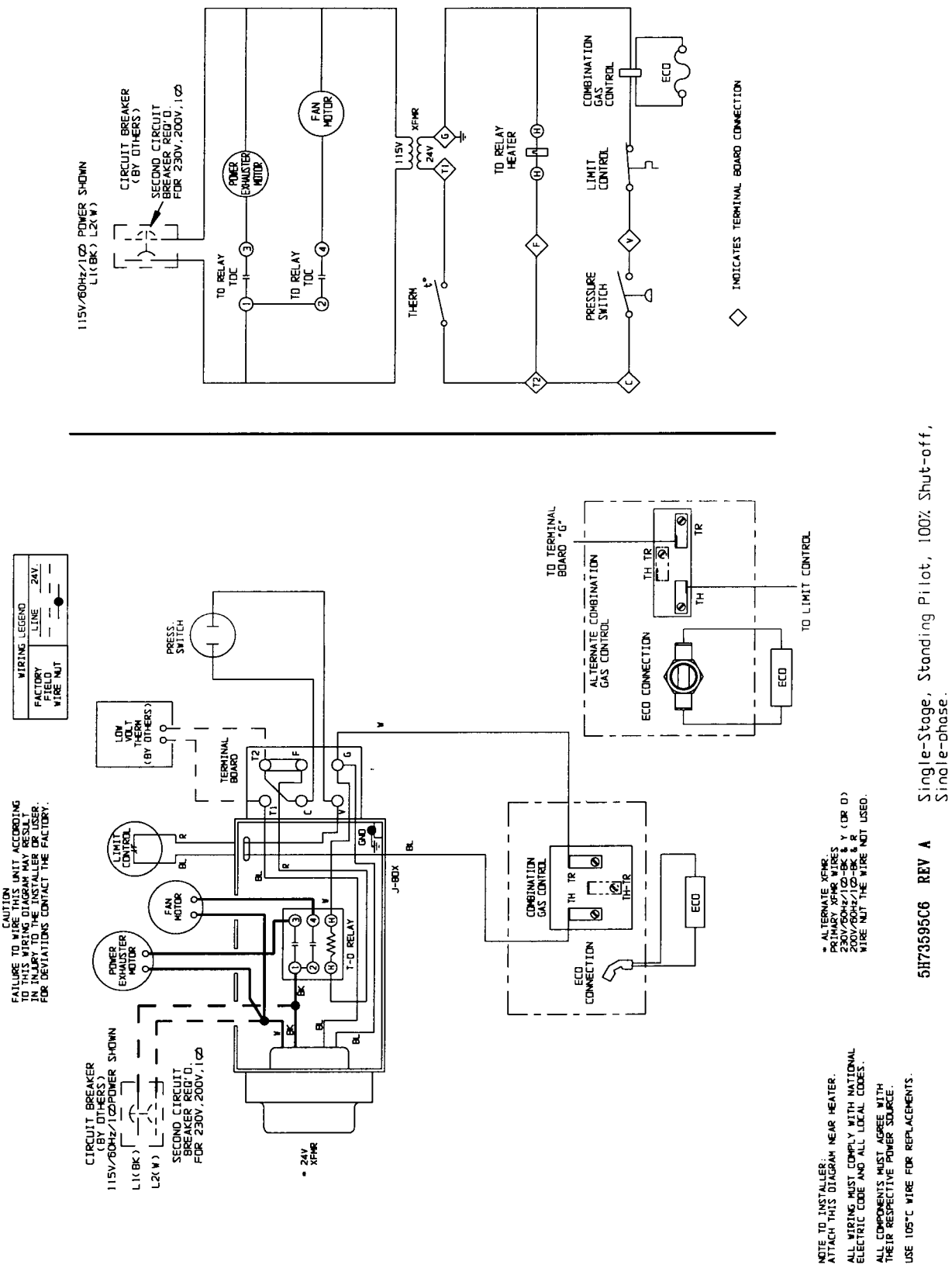

Single Phase — 5H73595C6 Rev A

6-440.2 – WIRING DIAGRAMS MODELS PV/BV

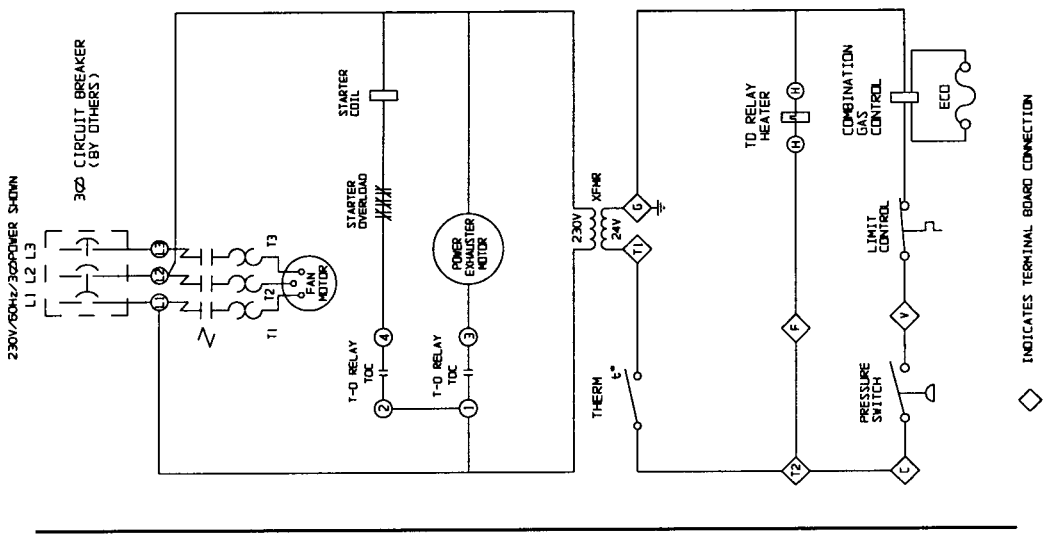

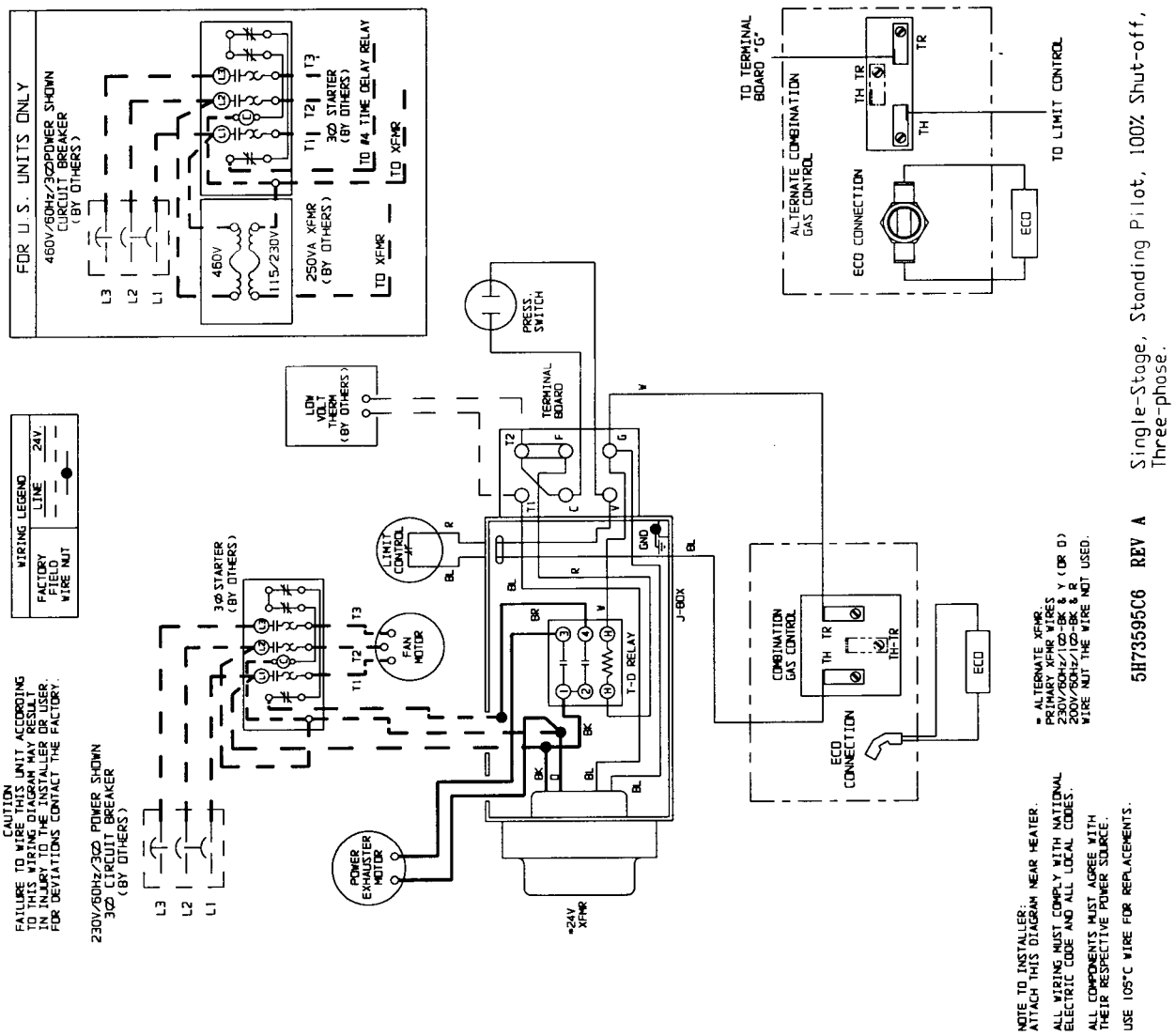

Three Phase — 5H73595C6 Rev A

6-440.2 – WIRING DIAGRAMS MODELS PV/BV

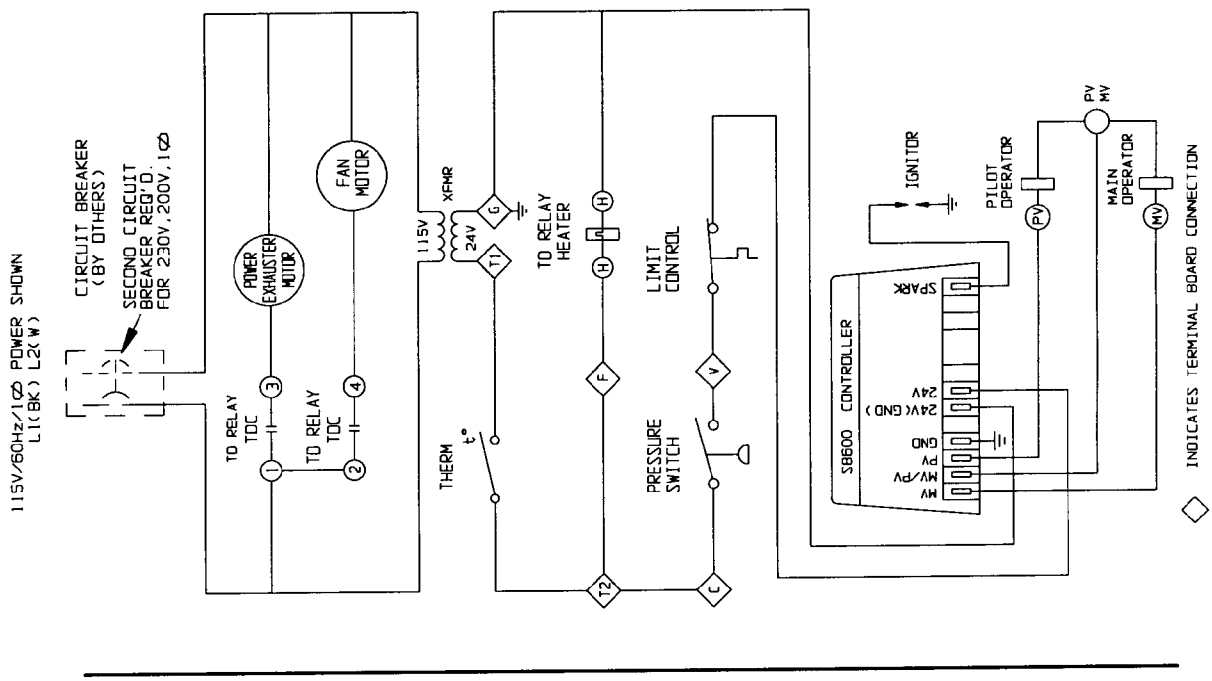

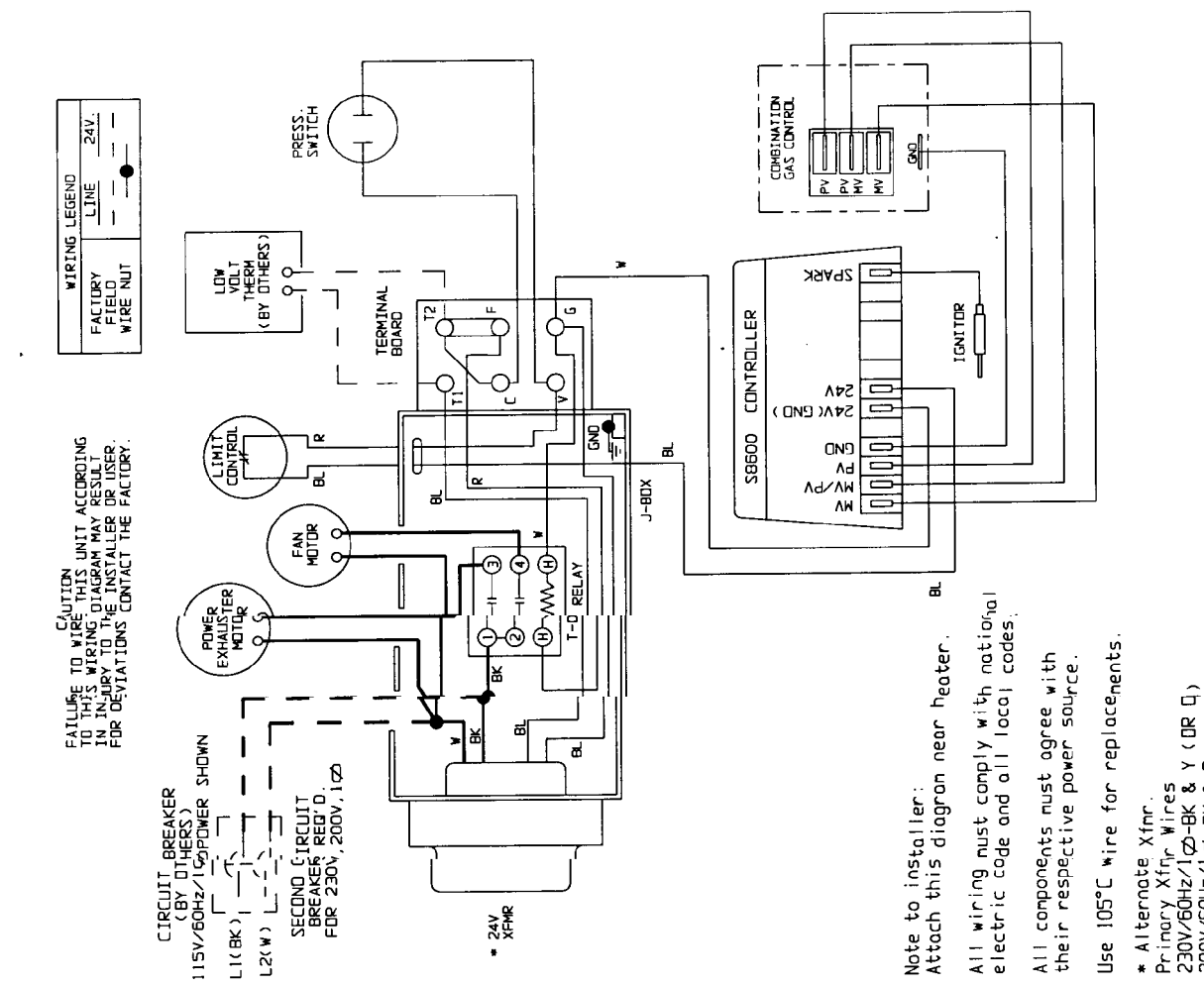

Single Phase — 5H73595C7 Rev A

6-440.2 – WIRING DIAGRAMS MODELS PV/BV

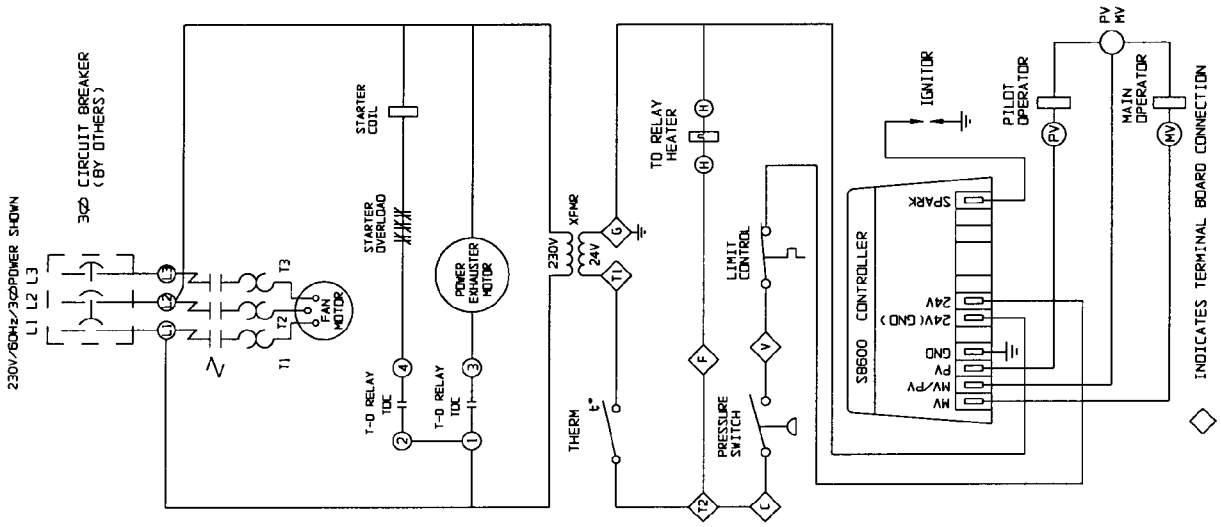

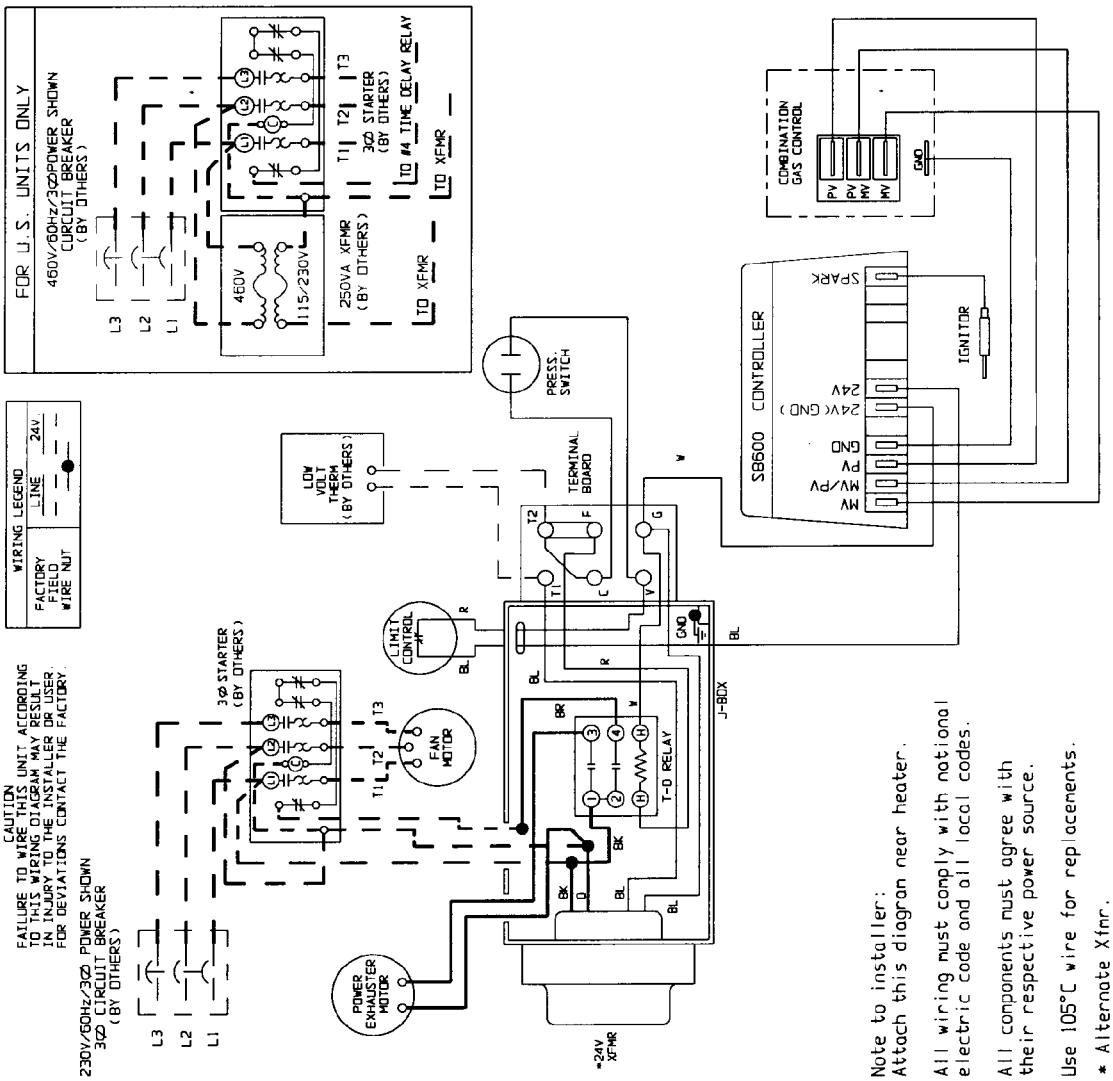

Three Phase — 5H73595C7 Rev A

6-440.2 – WIRING DIAGRAMS MODELS PV/BV

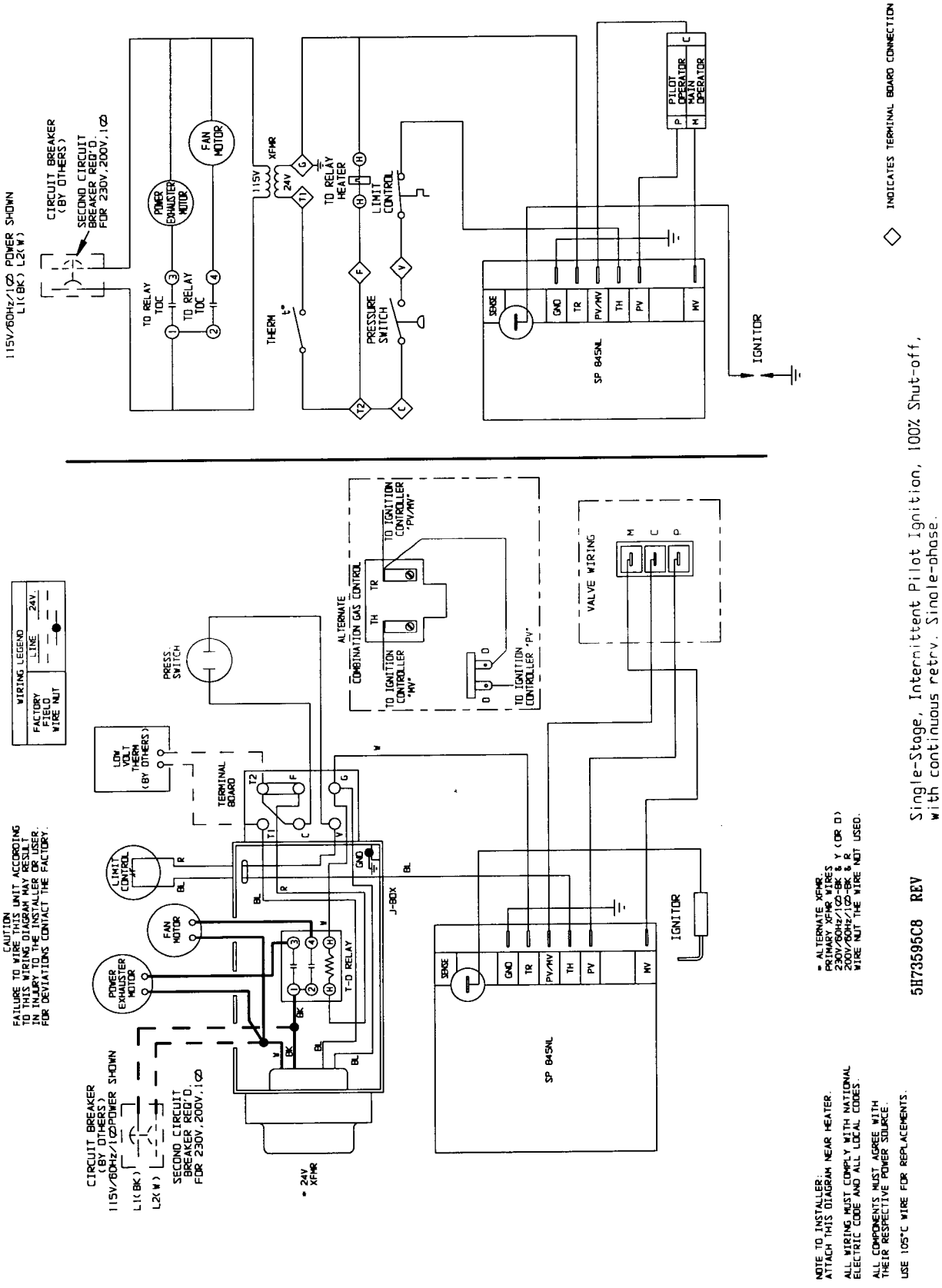

Single Phase — 5H73595C8 Rev

6-440.2 – WIRING DIAGRAMS MODELS PV/BV

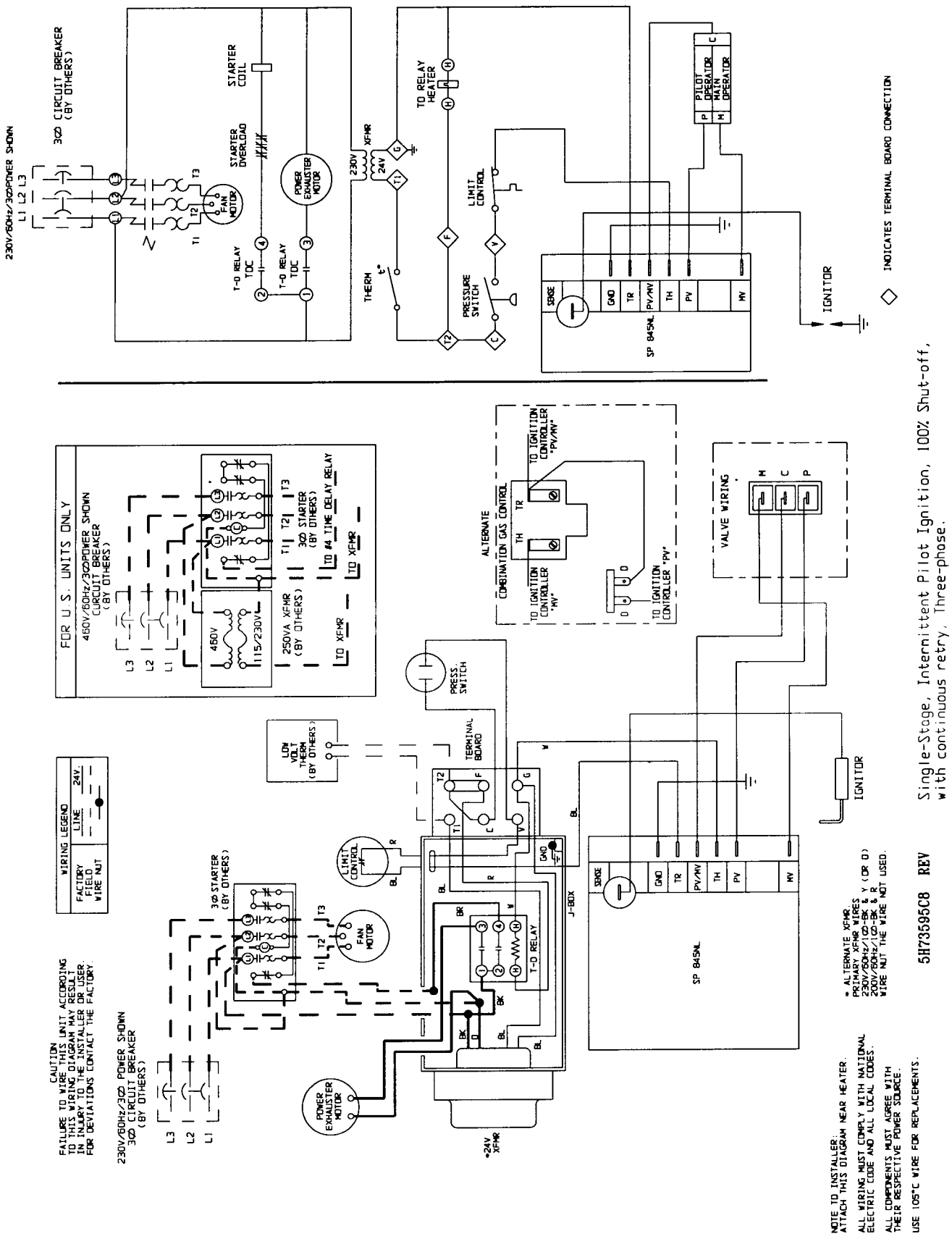

Three Phase — 5H73595C8 Rev

6-440.2 – WIRING DIAGRAMS MODELS PV/BV

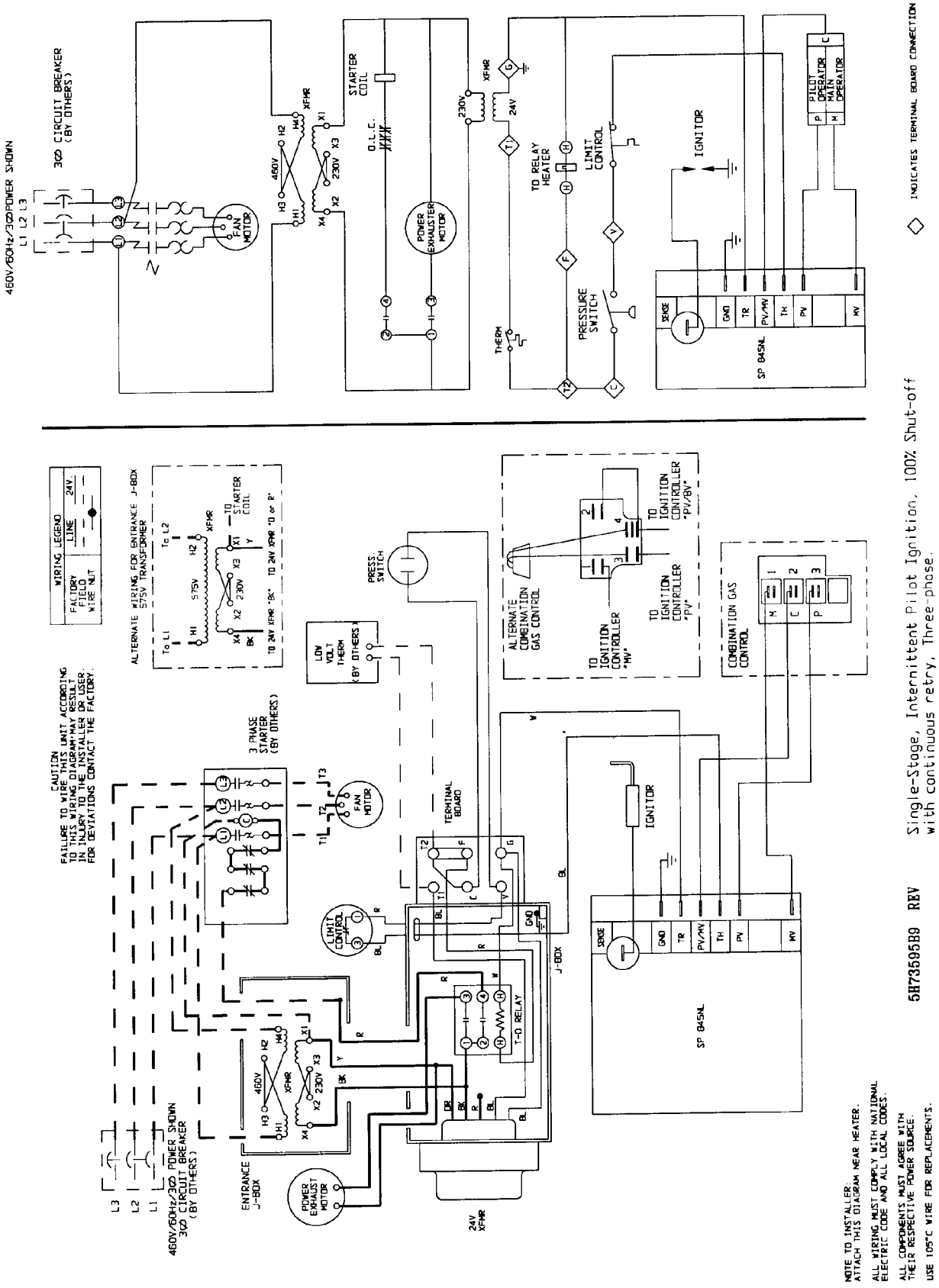

Three Phase — 5H73595B9 Rev

6-440.2 – WIRING DIAGRAMS MODELS PV/BV

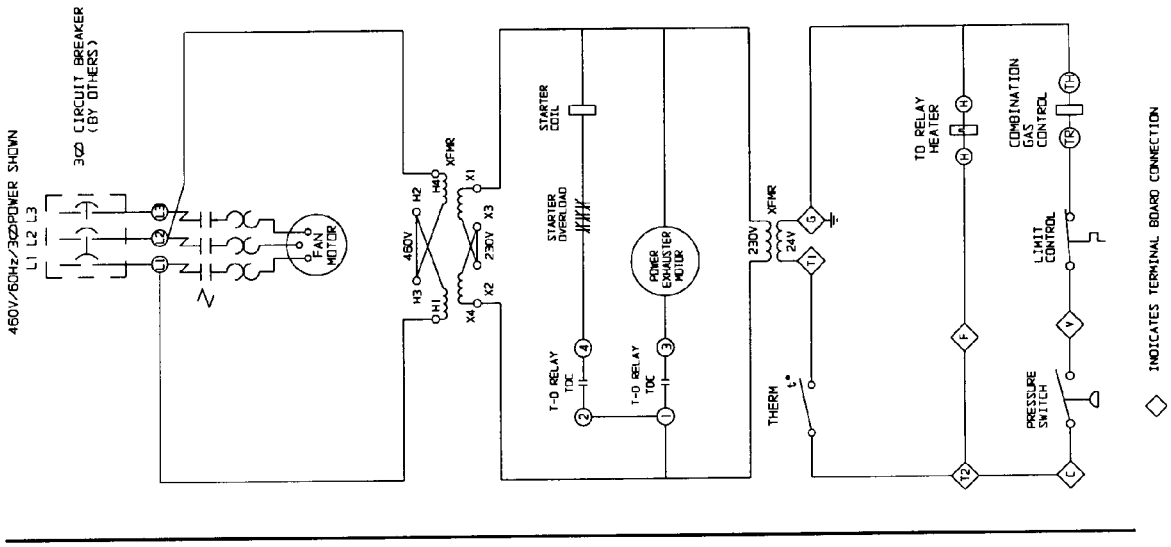

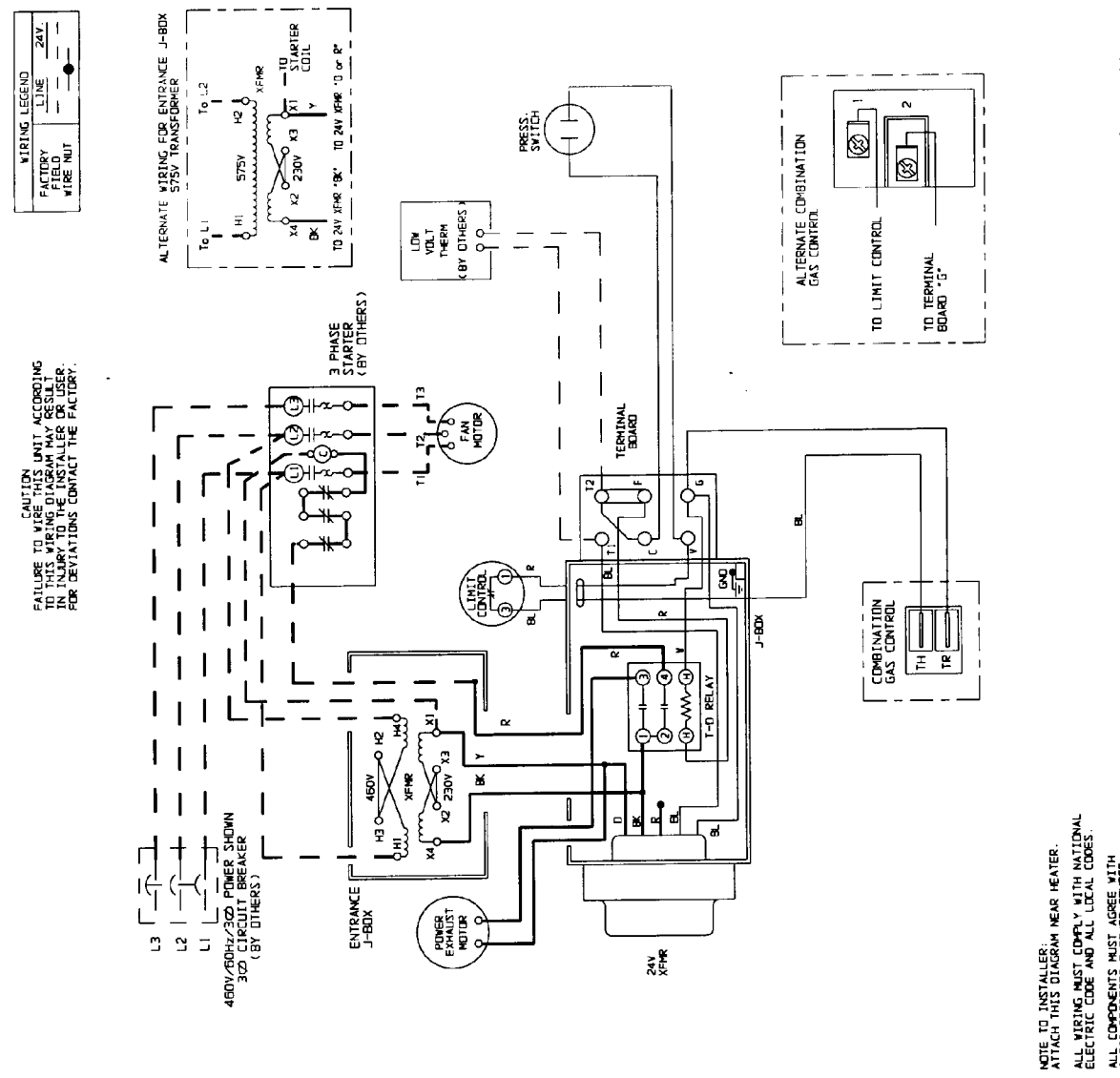

Three Phase — 5H73595B10 Rev

6-440.2 – WIRING DIAGRAMS MODELS PV/BV

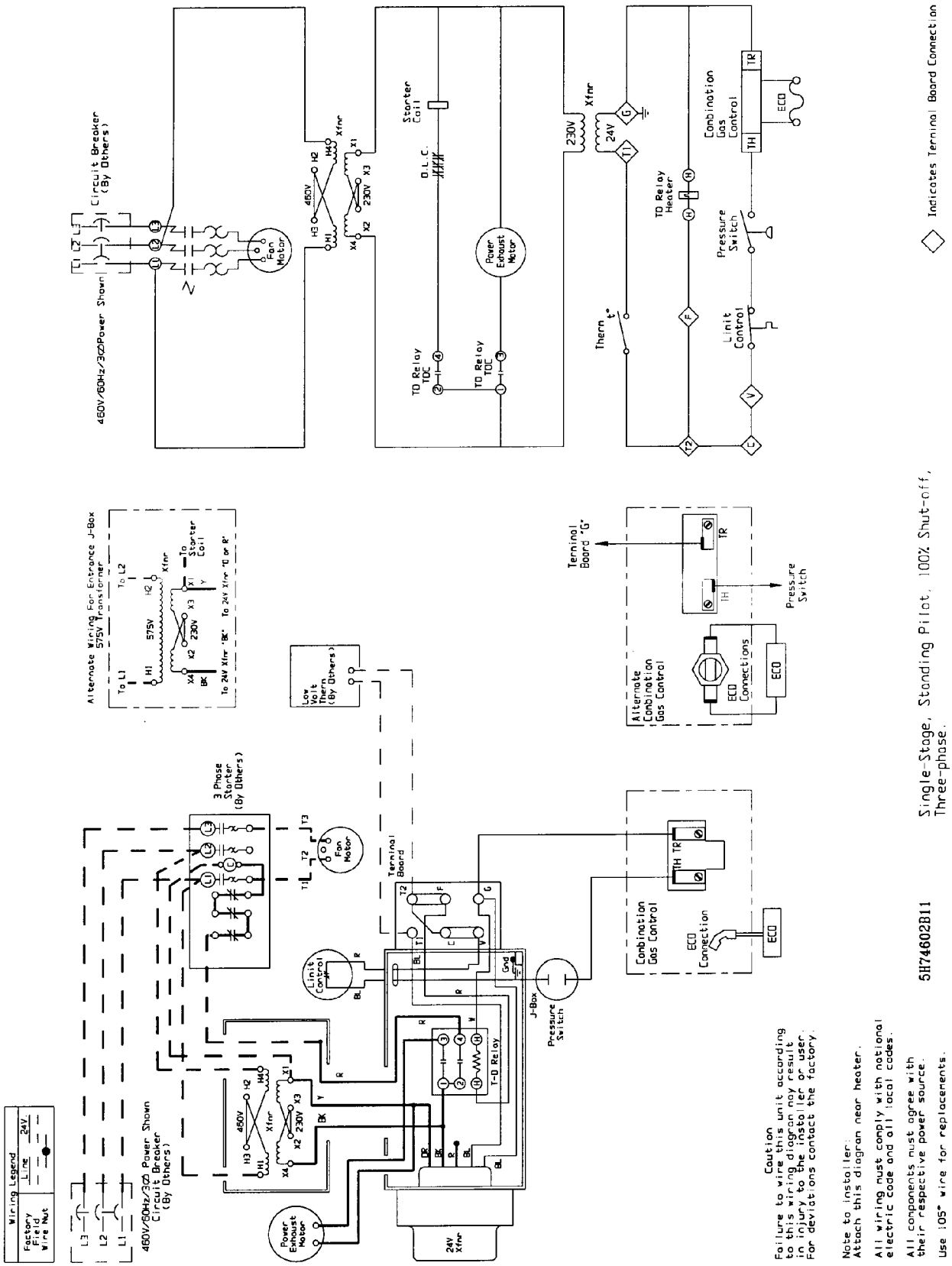

Three Phase — 5H73595B11 Rev A

6-440.2 – WIRING DIAGRAMS MODELS PV/BV

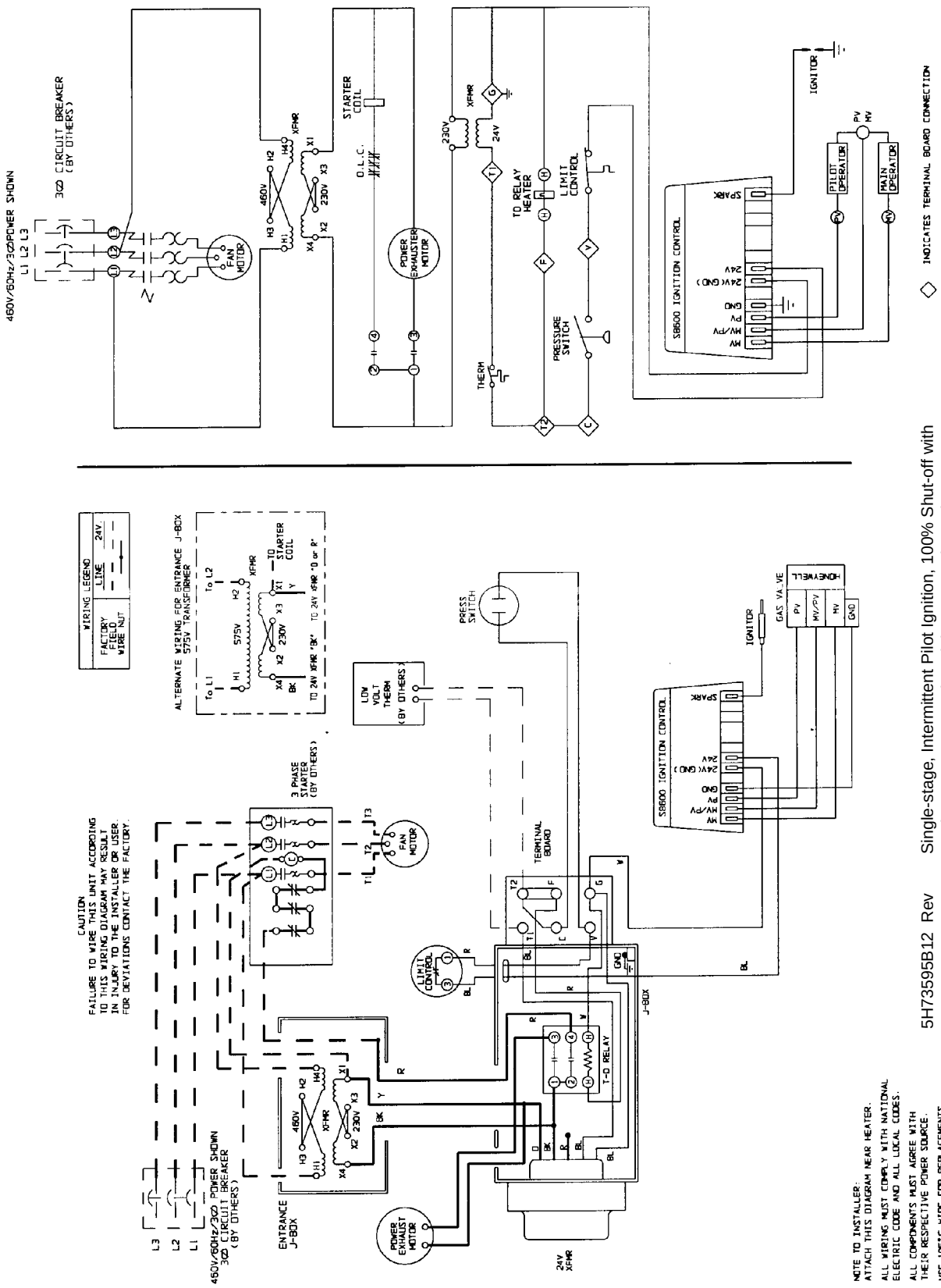

5H73595B12 Rev

Single-stage, Intermittent Pilot Ignition, 100% Shut-off with continuous retry, Fan time delay, Low-voltage thermostat.

6-440.2 – WIRING DIAGRAMS MODELS PV/BV

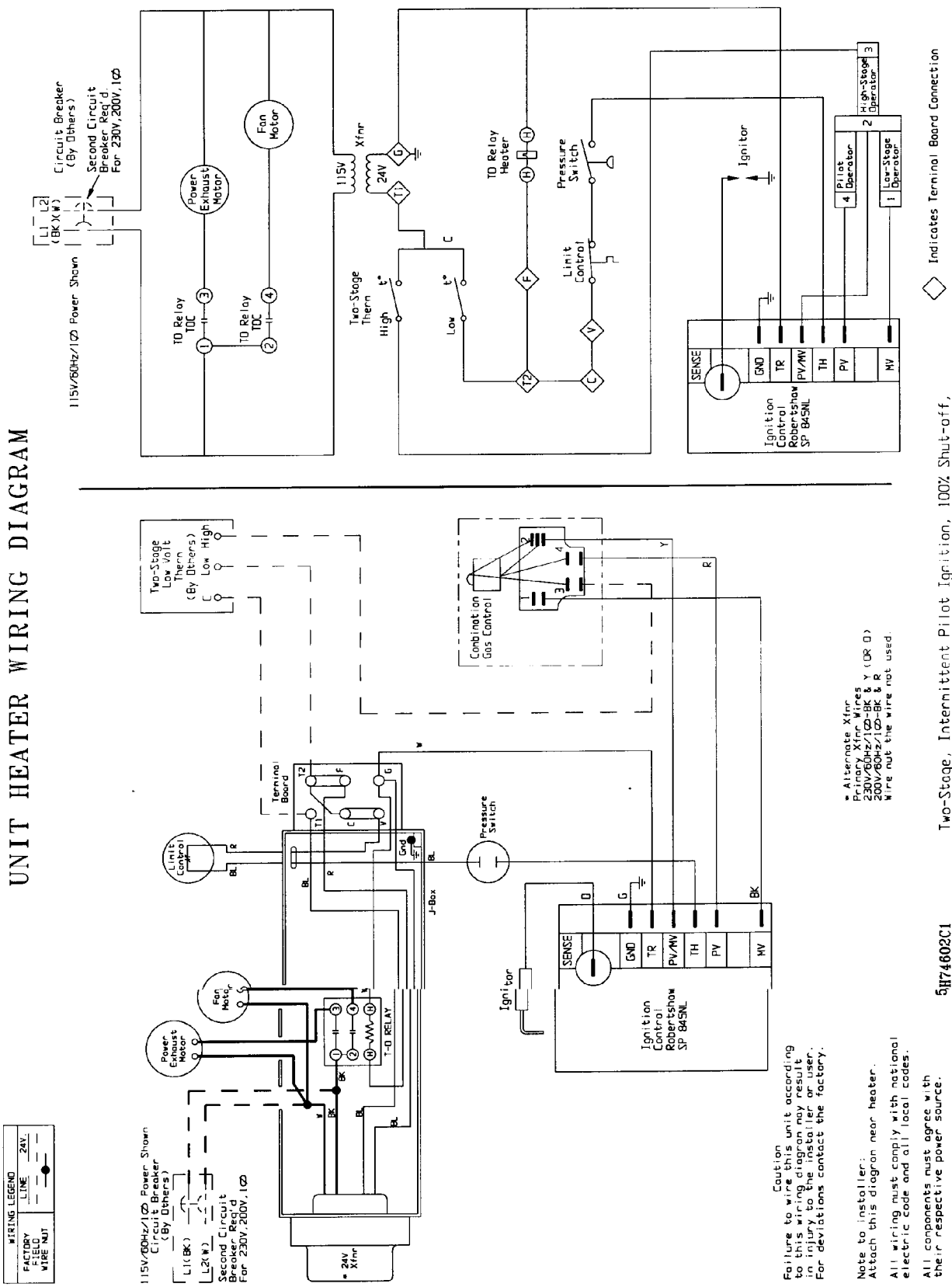

Single Phase — 5H74602C1

6-440.2 – WIRING DIAGRAMS MODELS PV/BV

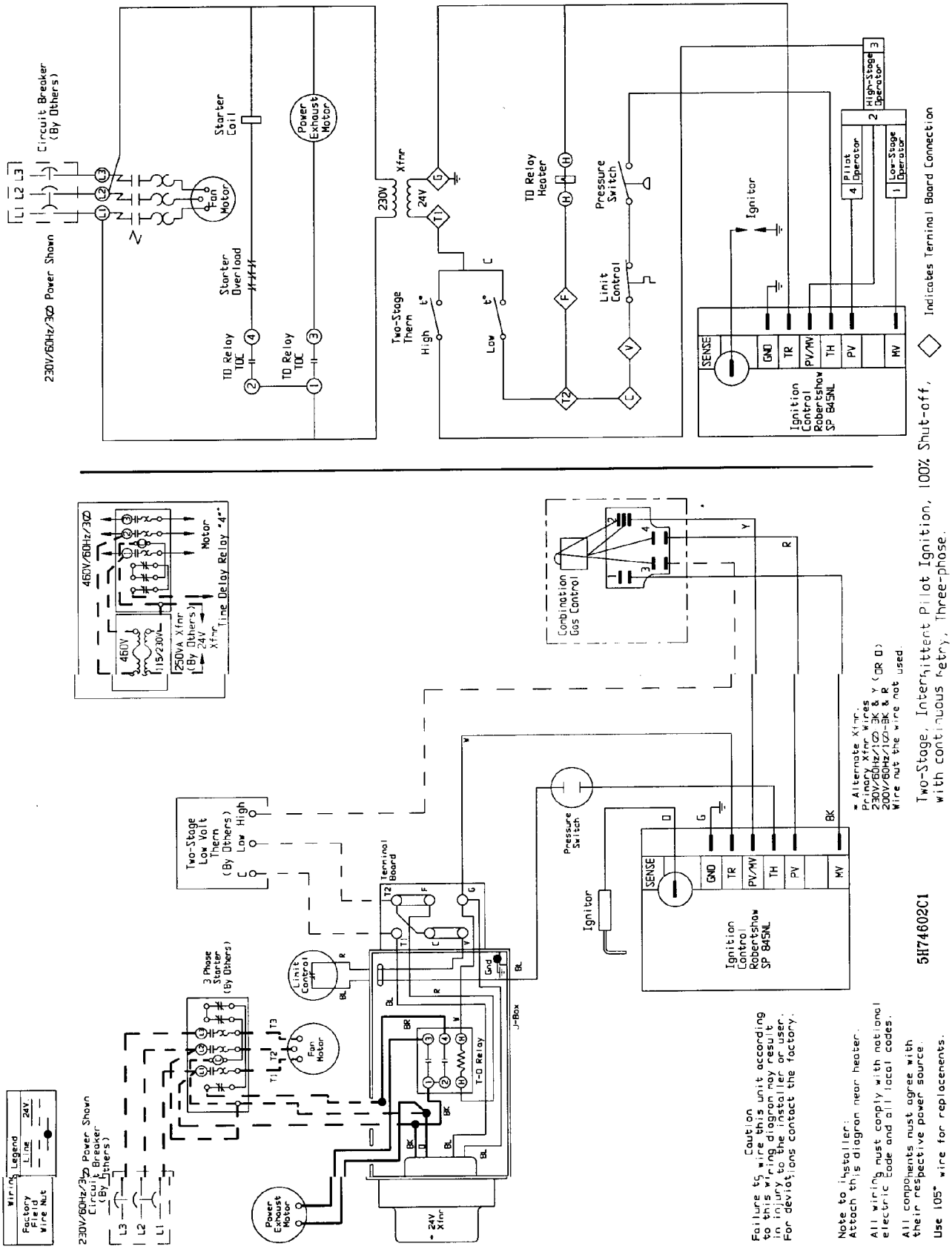

Three Phase — 5H74602C1 Rev A

6-440.2 – WIRING DIAGRAMS MODELS PV/BV

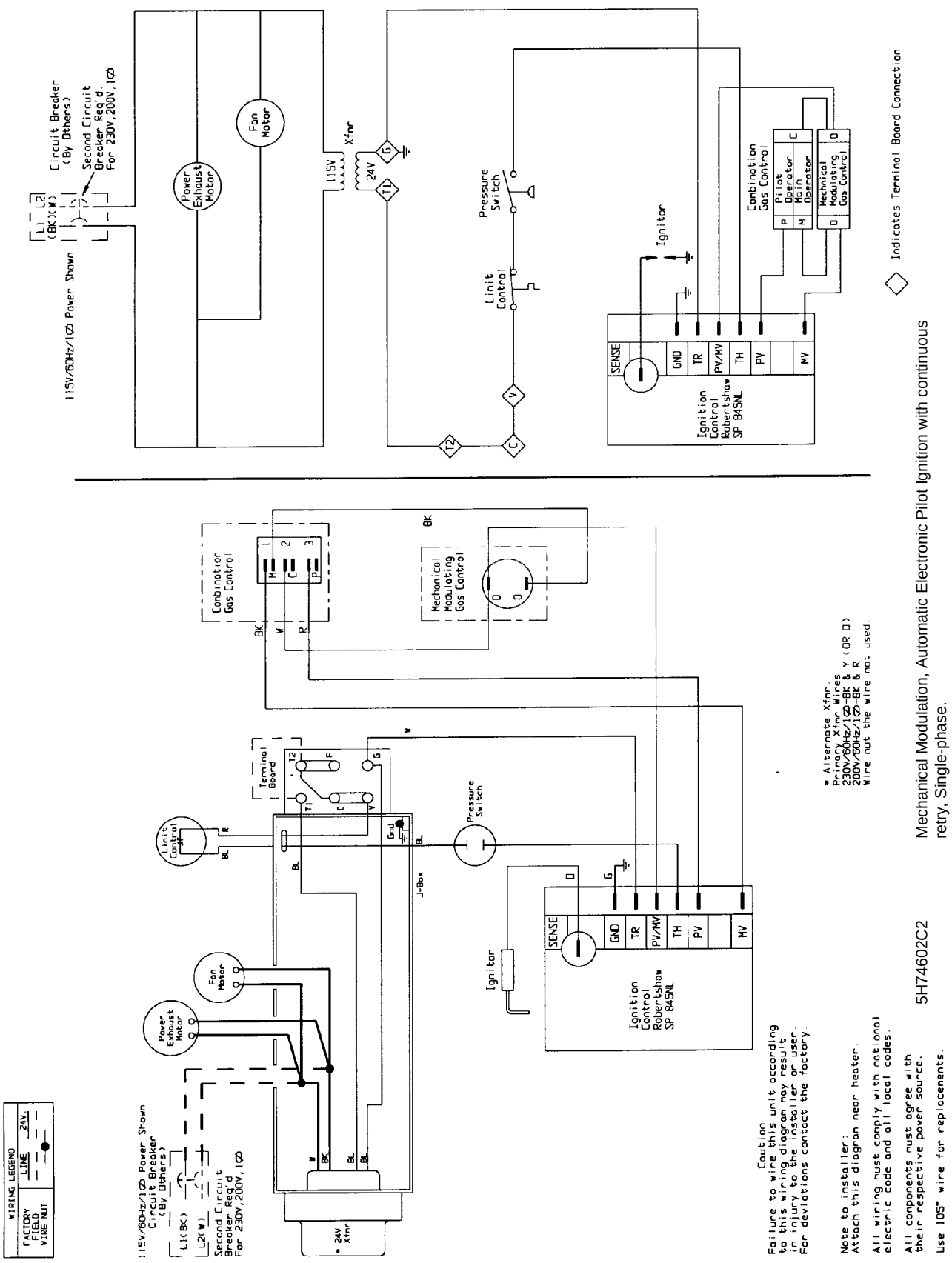

Mechanical Modulation, Automatic Electronic Pilot Ignition with continuous retry, Single-phase.

Single Phase — 5H74602C2

6-440.2 – WIRING DIAGRAMS MODELS PV/BV

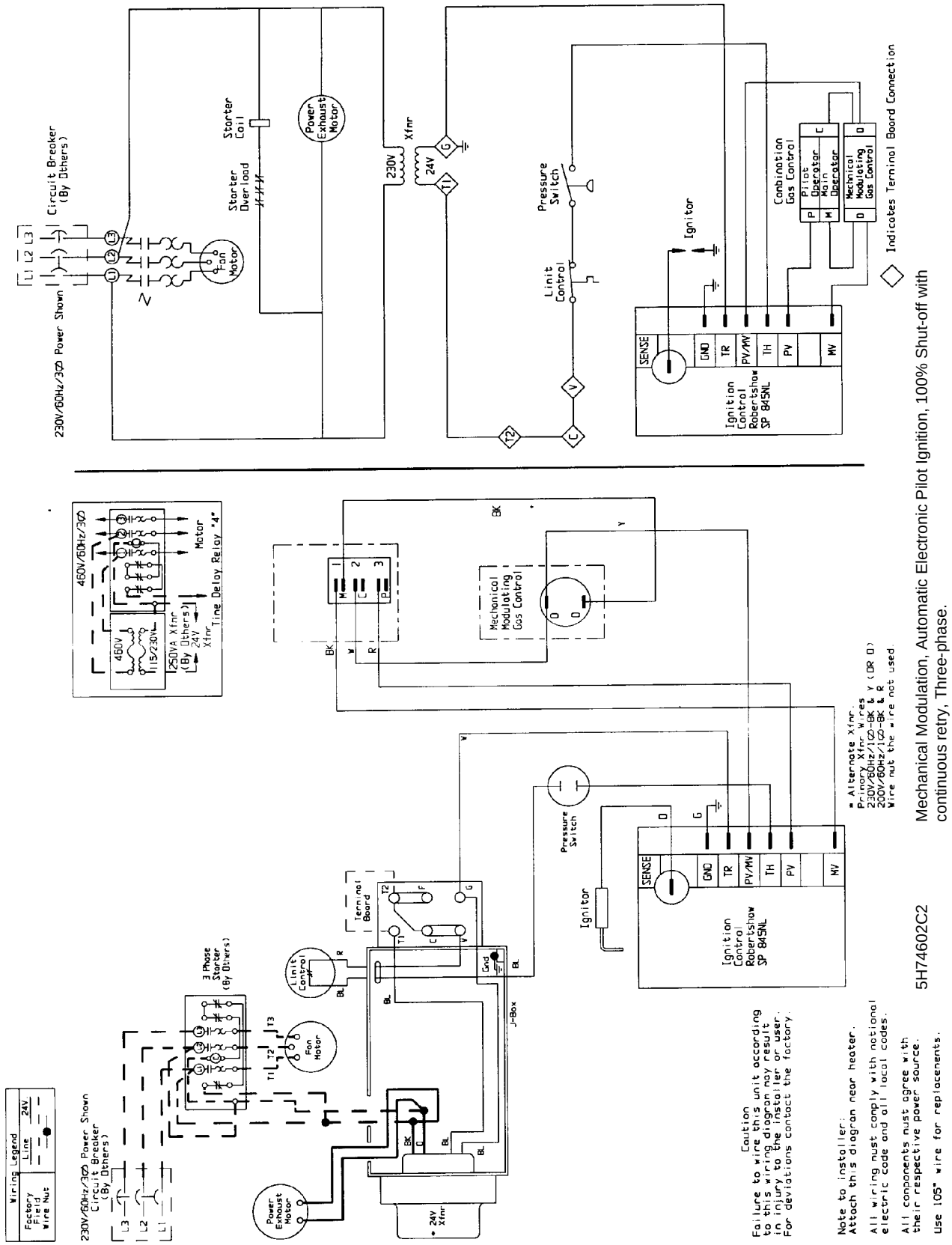

Mechanical Modulation, Automatic Electronic Pilot Ignition, 100% Shut-off with continuous retry, Three-phase.

Three Phase — 5H74602C2

6-440.2 – WIRING DIAGRAMS MODELS PV/BV

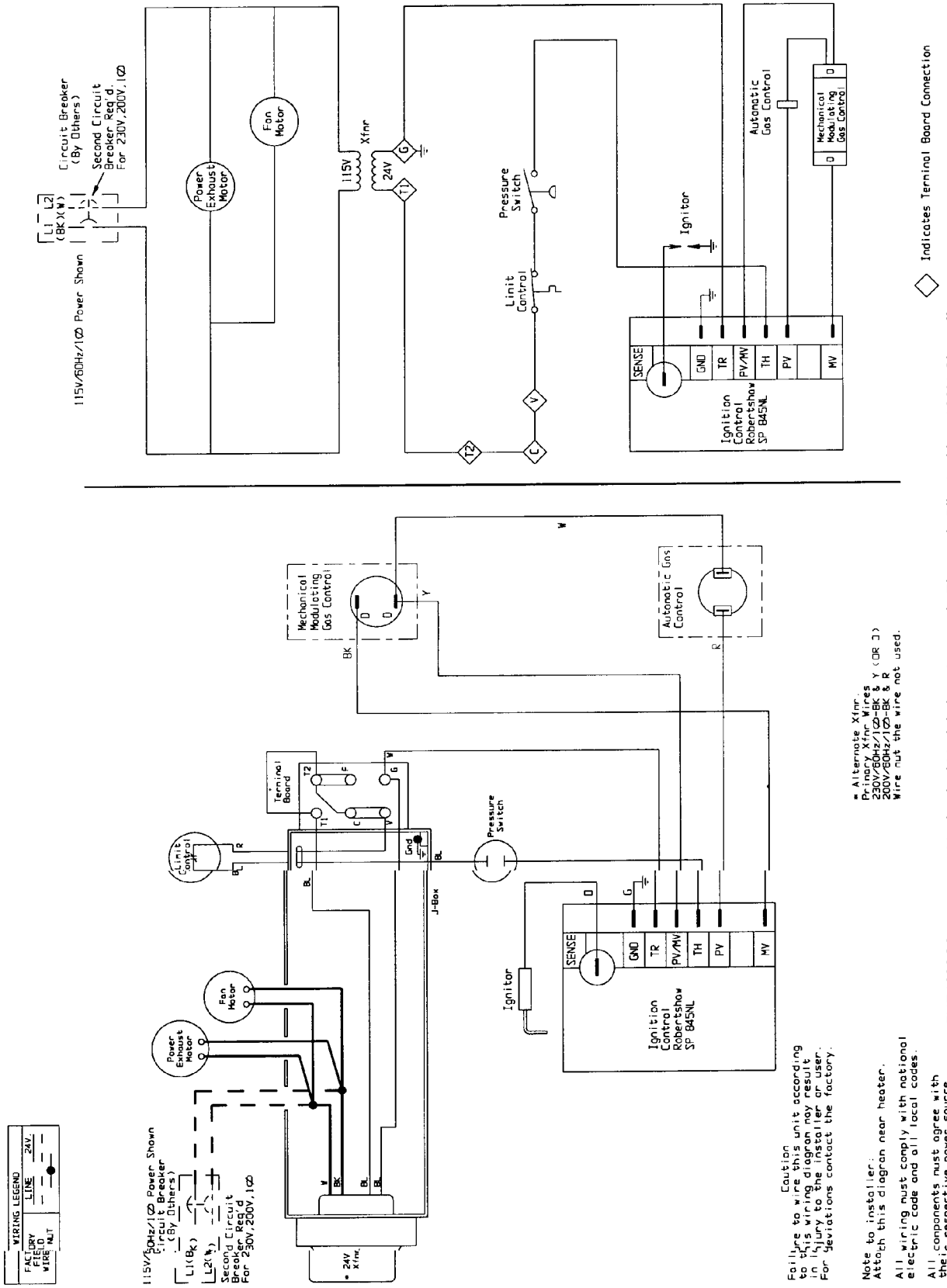

Single Phase — 5H74602C3

6-440.2 – WIRING DIAGRAMS MODELS PV/BV

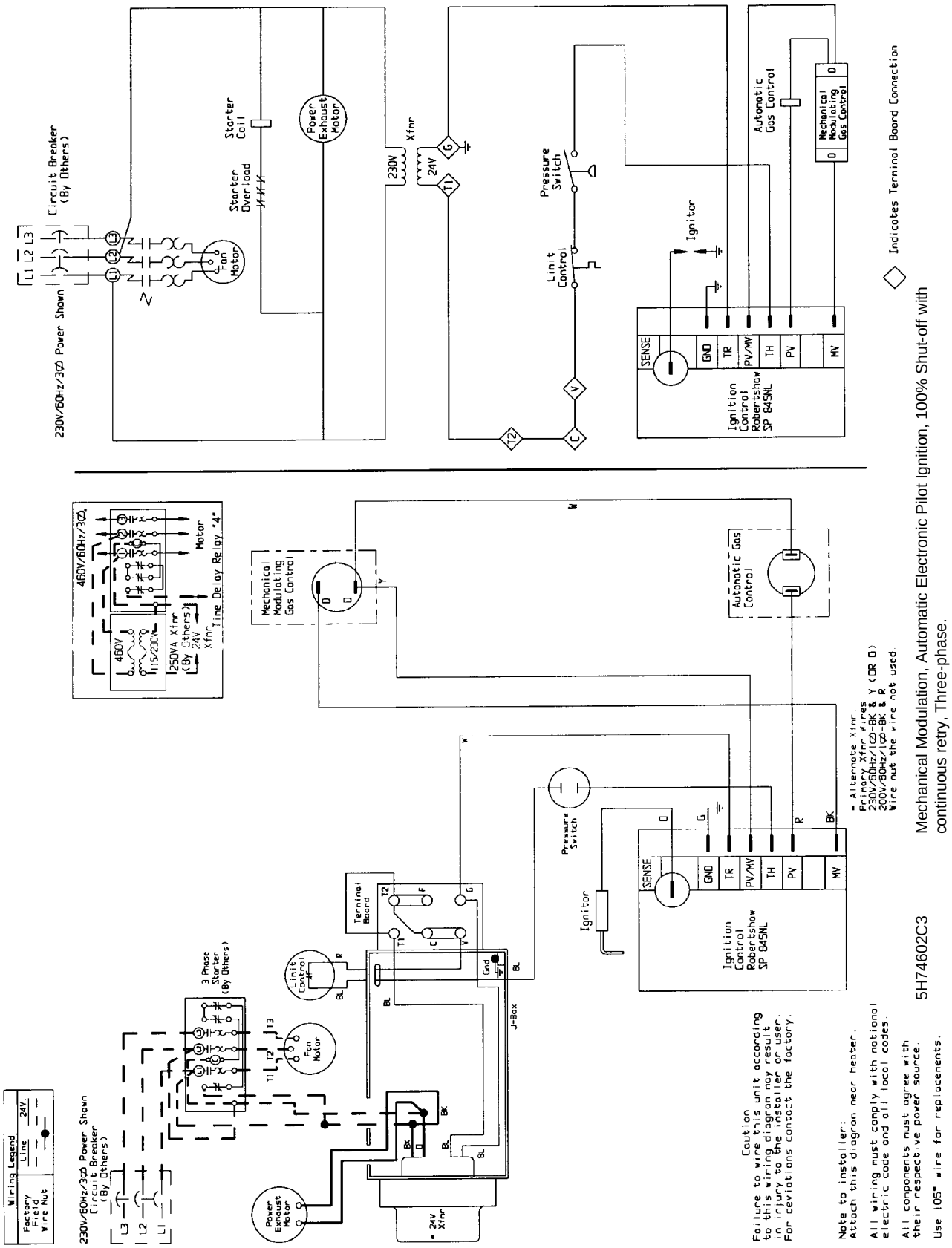

Mechanical Modulation, Automatic Electronic Pilot Ignition, 100% Shut-off with continuous retry, Three-phase.

Three Phase — 5H74602C3

6-440.2 – WIRING DIAGRAMS MODELS PV/BV

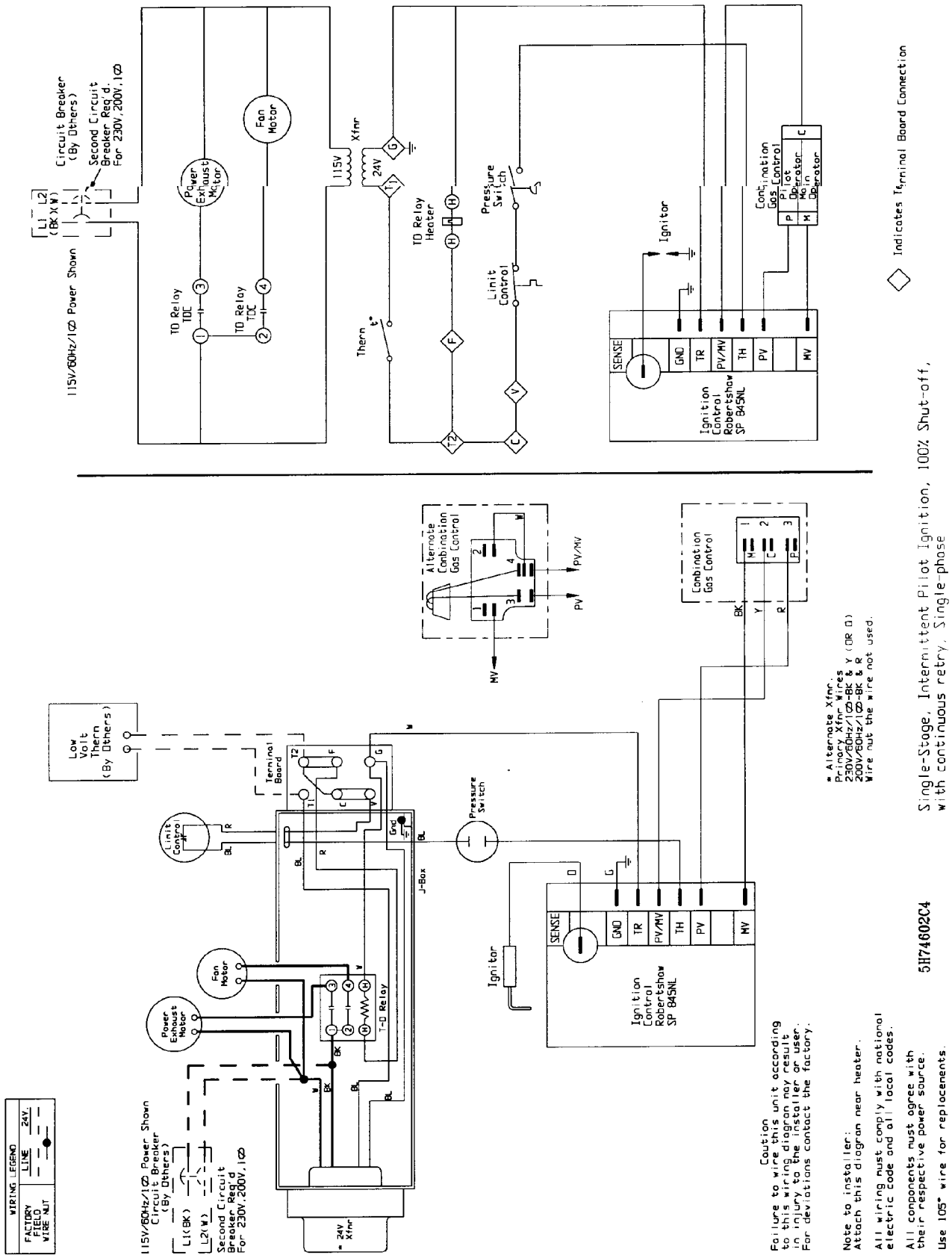

Single Phase — 5H74602C4

6-440.2 – WIRING DIAGRAMS MODELS PV/BV

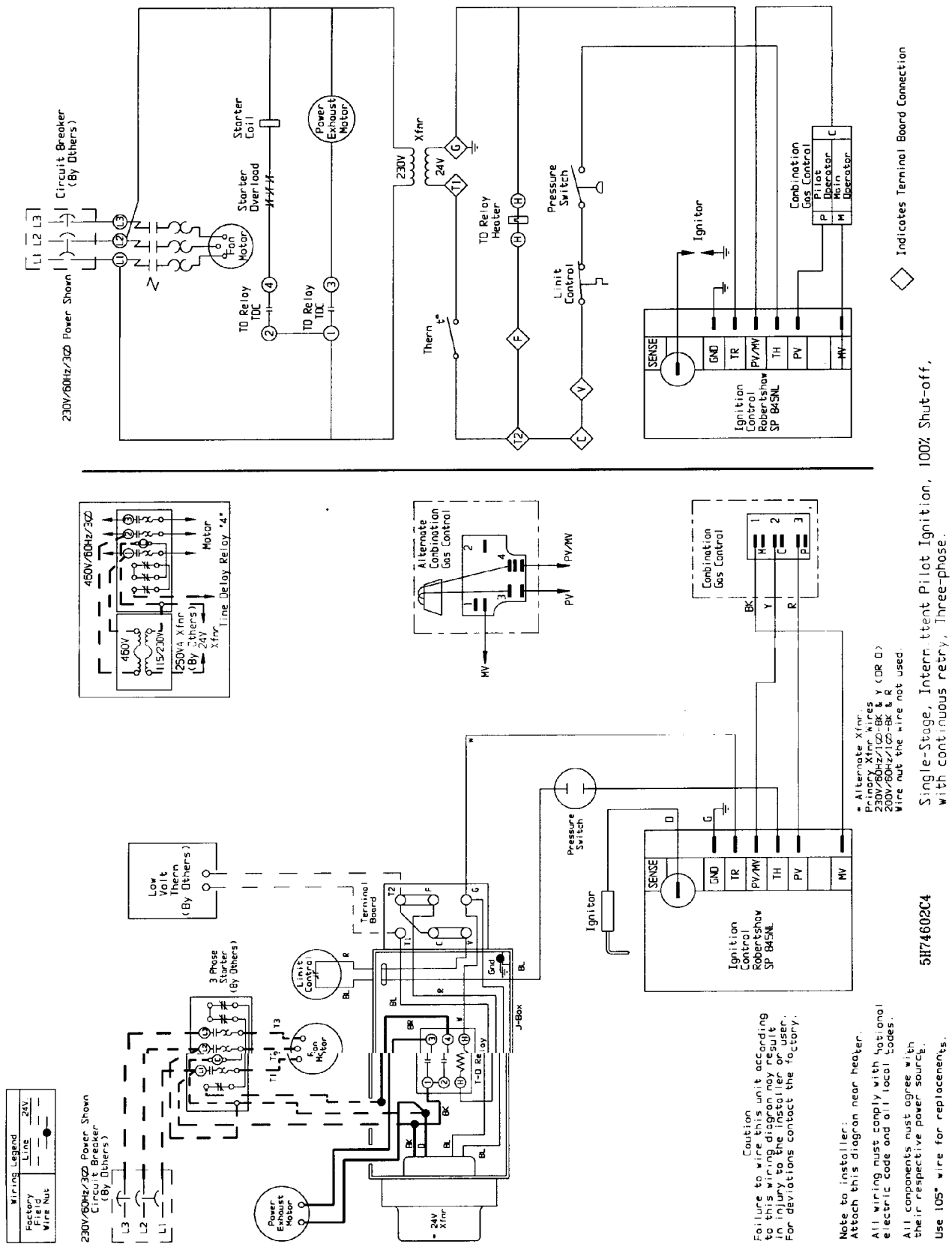

Three Phase — 5H74602C4

6-440.2 – WIRING DIAGRAMS MODELS PV/BV

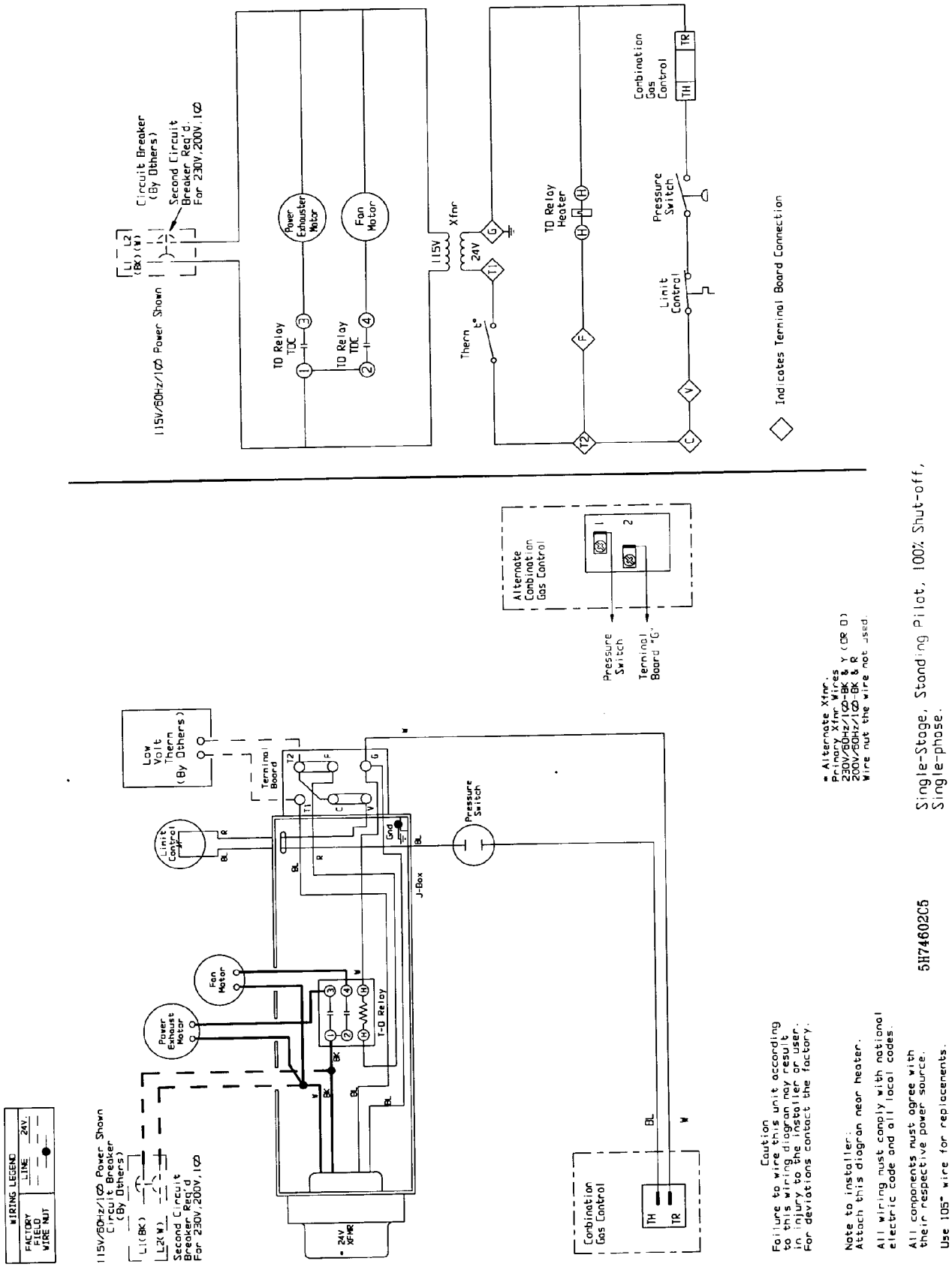

Single Phase — 5H74602C5

6-440.2 – WIRING DIAGRAMS MODELS PV/BV

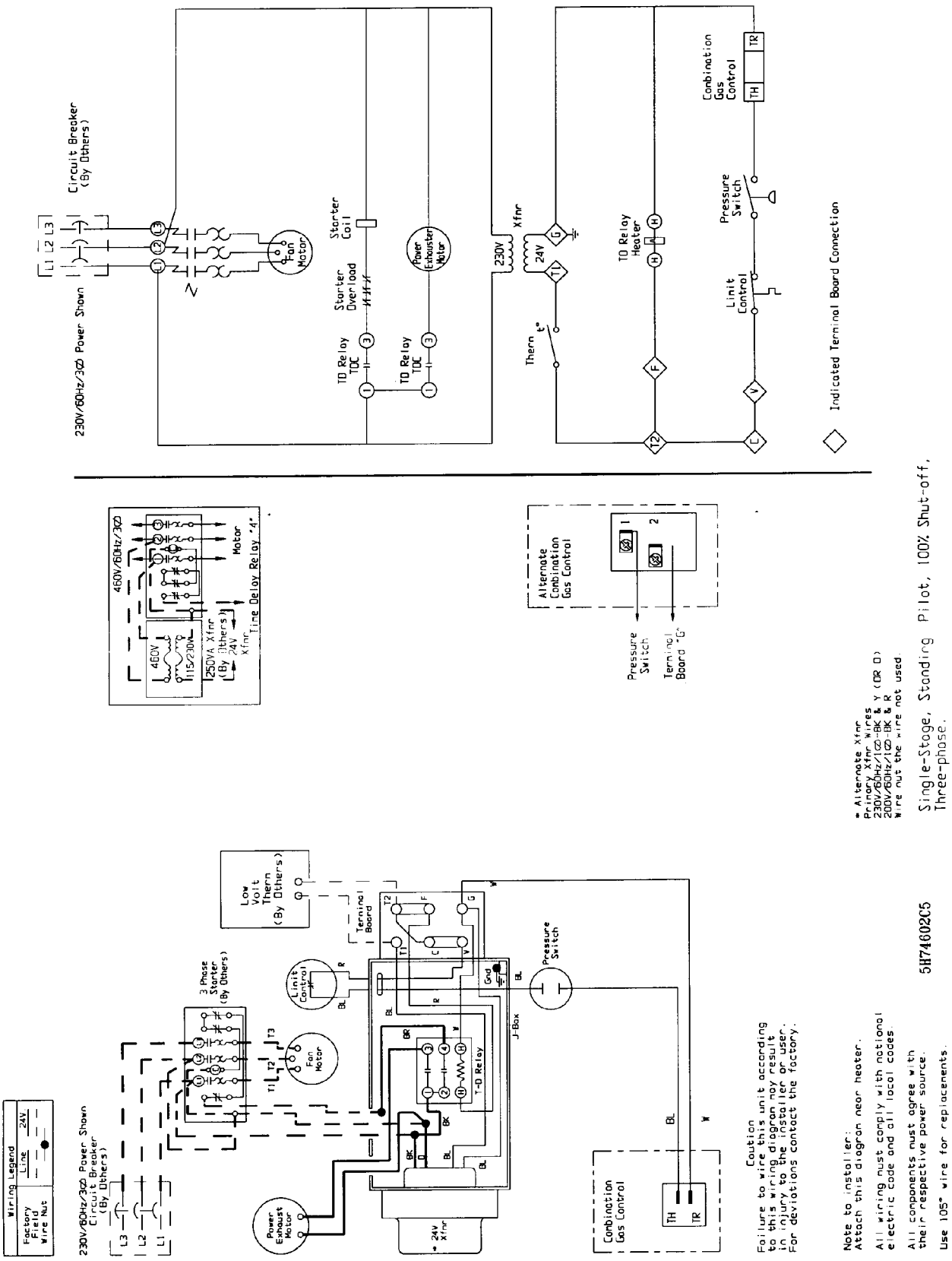

Three Phase — 5H74602C5

6-440.2 – WIRING DIAGRAMS MODELS PV/BV

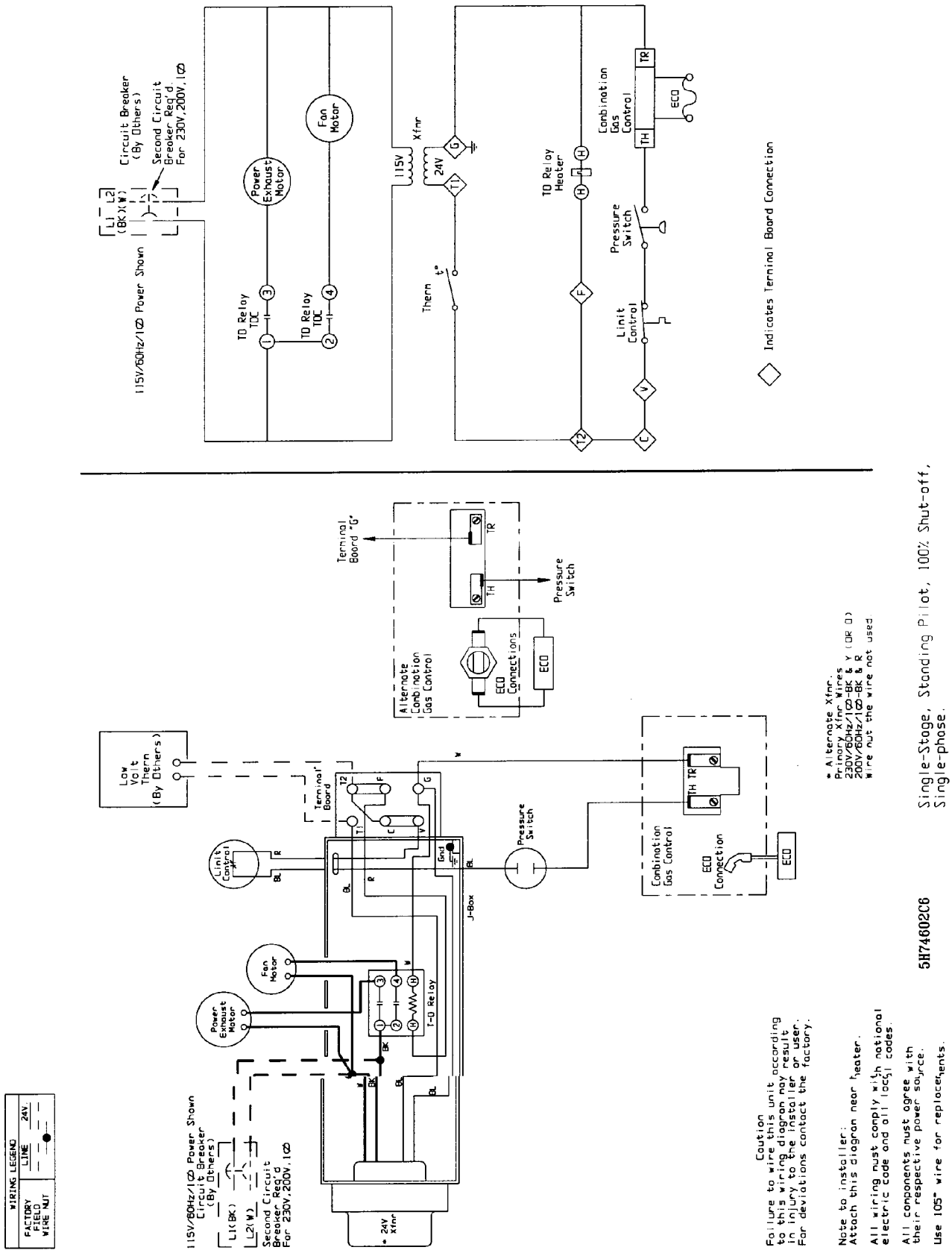

Single Phase — 5H74602C6

6-440.2 – WIRING DIAGRAMS MODELS PV/BV

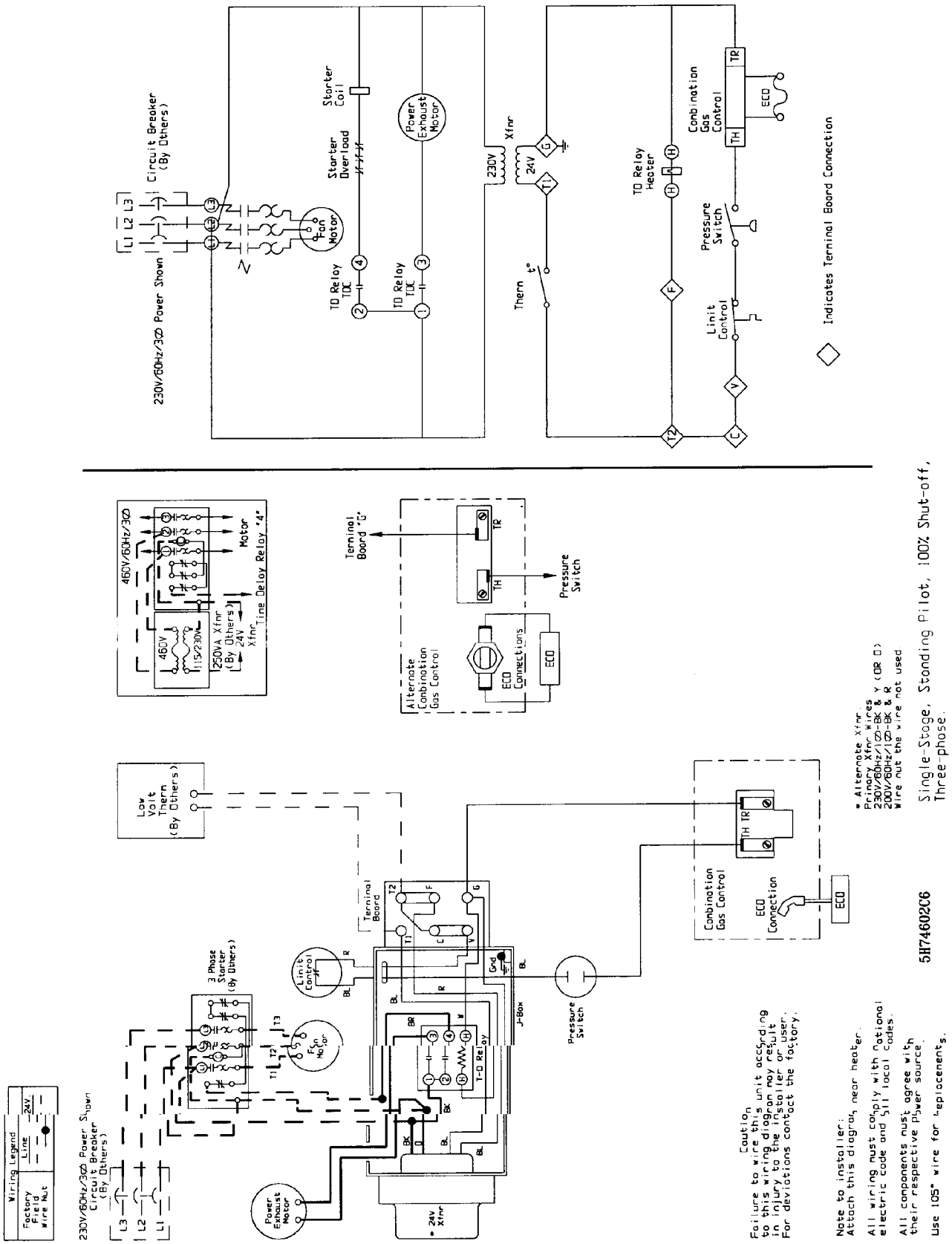

Three Phase — 5H74602C6

6-440.2 – WIRING DIAGRAMS MODELS PV/BV

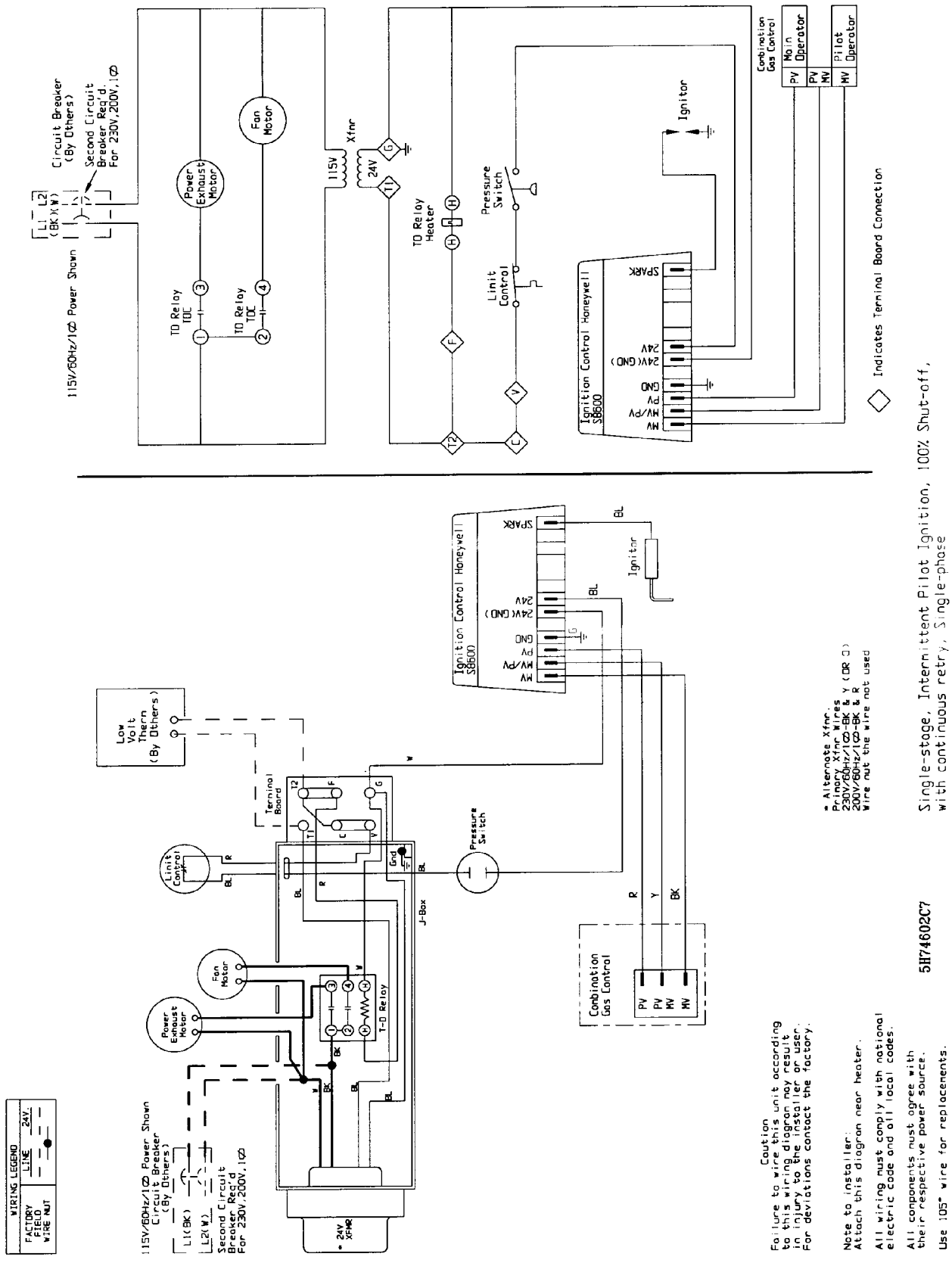

Single Phase — 5H74602C7

6-440.2 – WIRING DIAGRAMS MODELS PV/BV

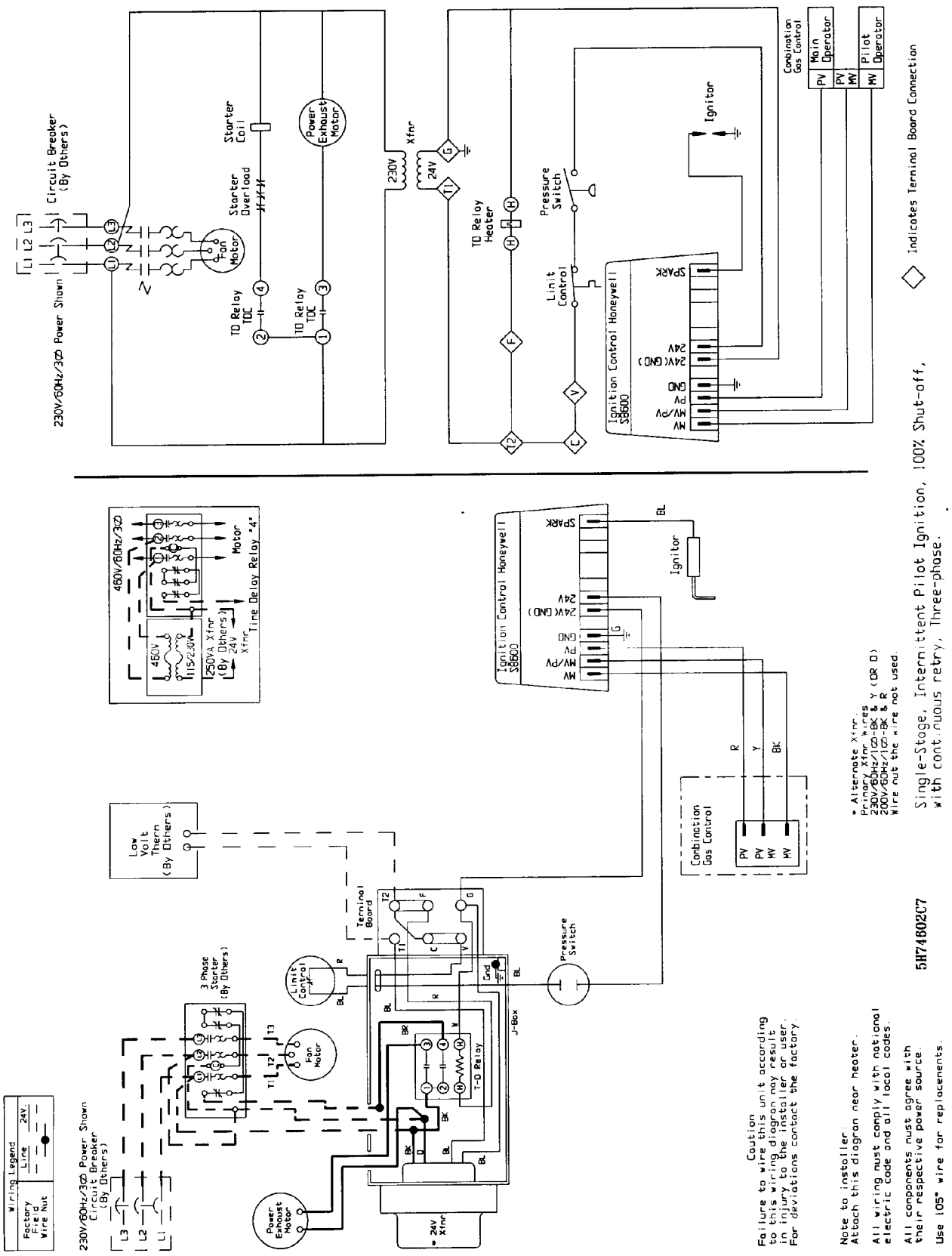

Three Phase — 5H74602C7

6-440.2 – WIRING DIAGRAMS MODELS PV/BV

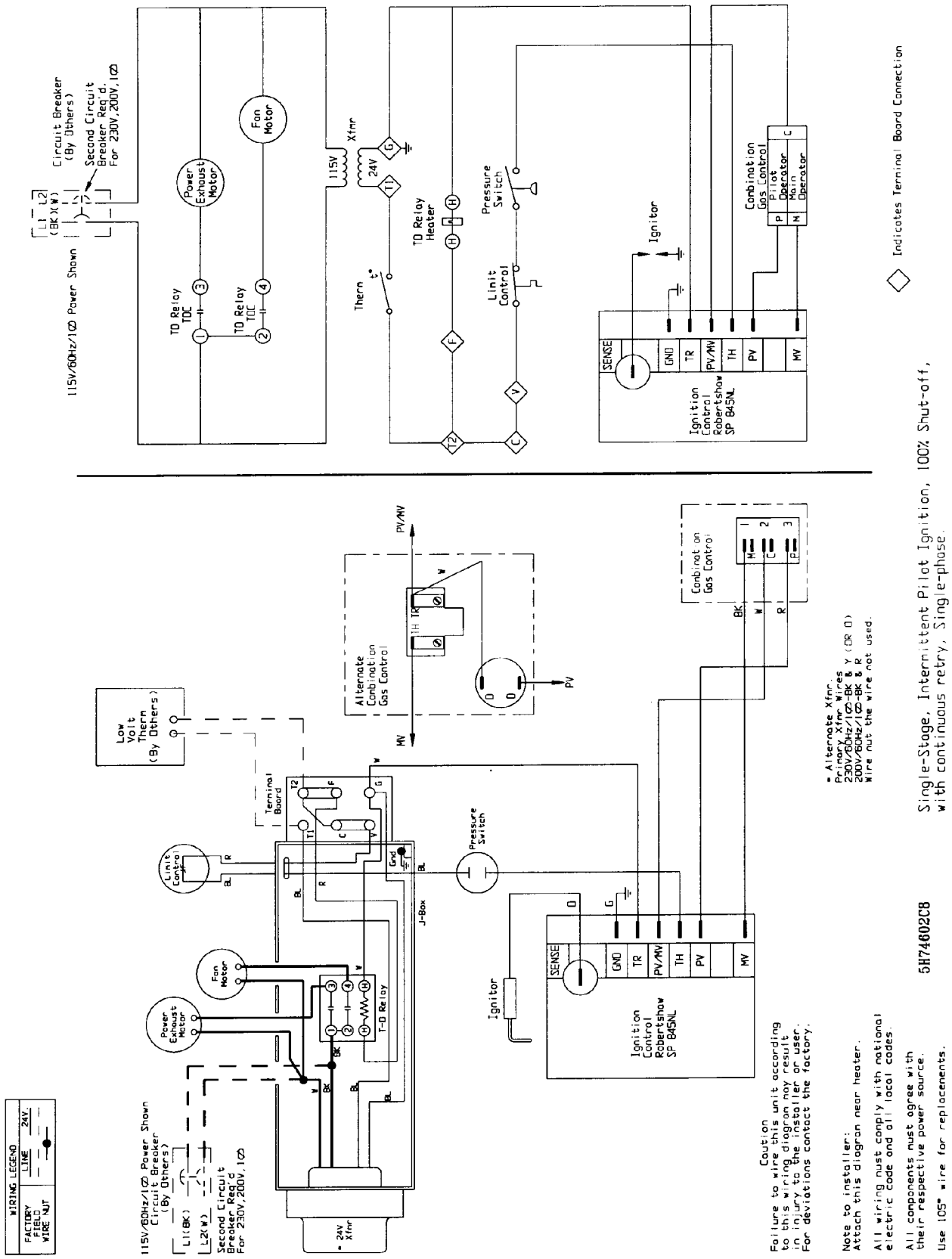

Single Phase — 5H74602C8

6-440.2 – WIRING DIAGRAMS MODELS PV/BV

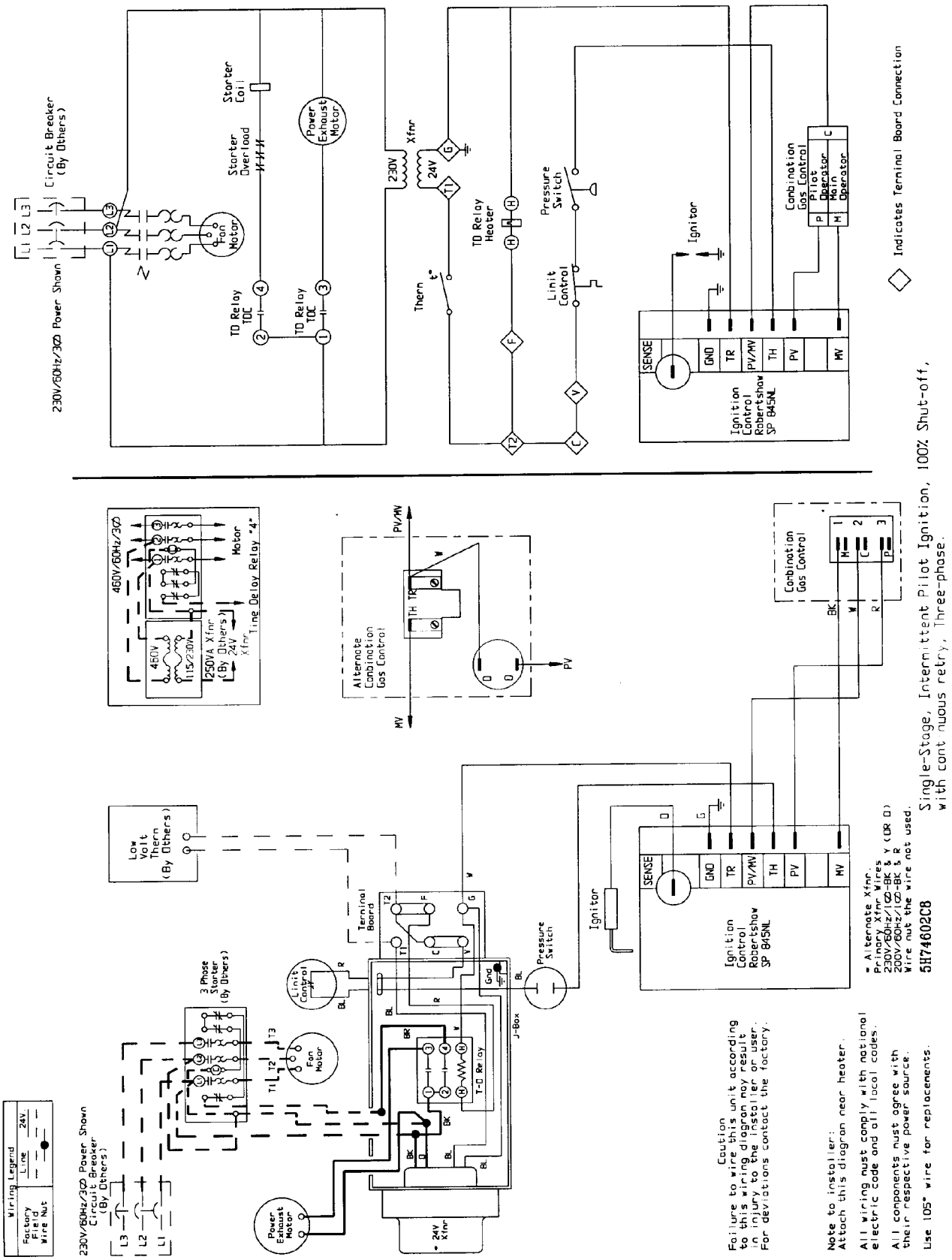

Three Phase — 5H74602C8

6-440.2 – WIRING DIAGRAMS MODELS PV/BV

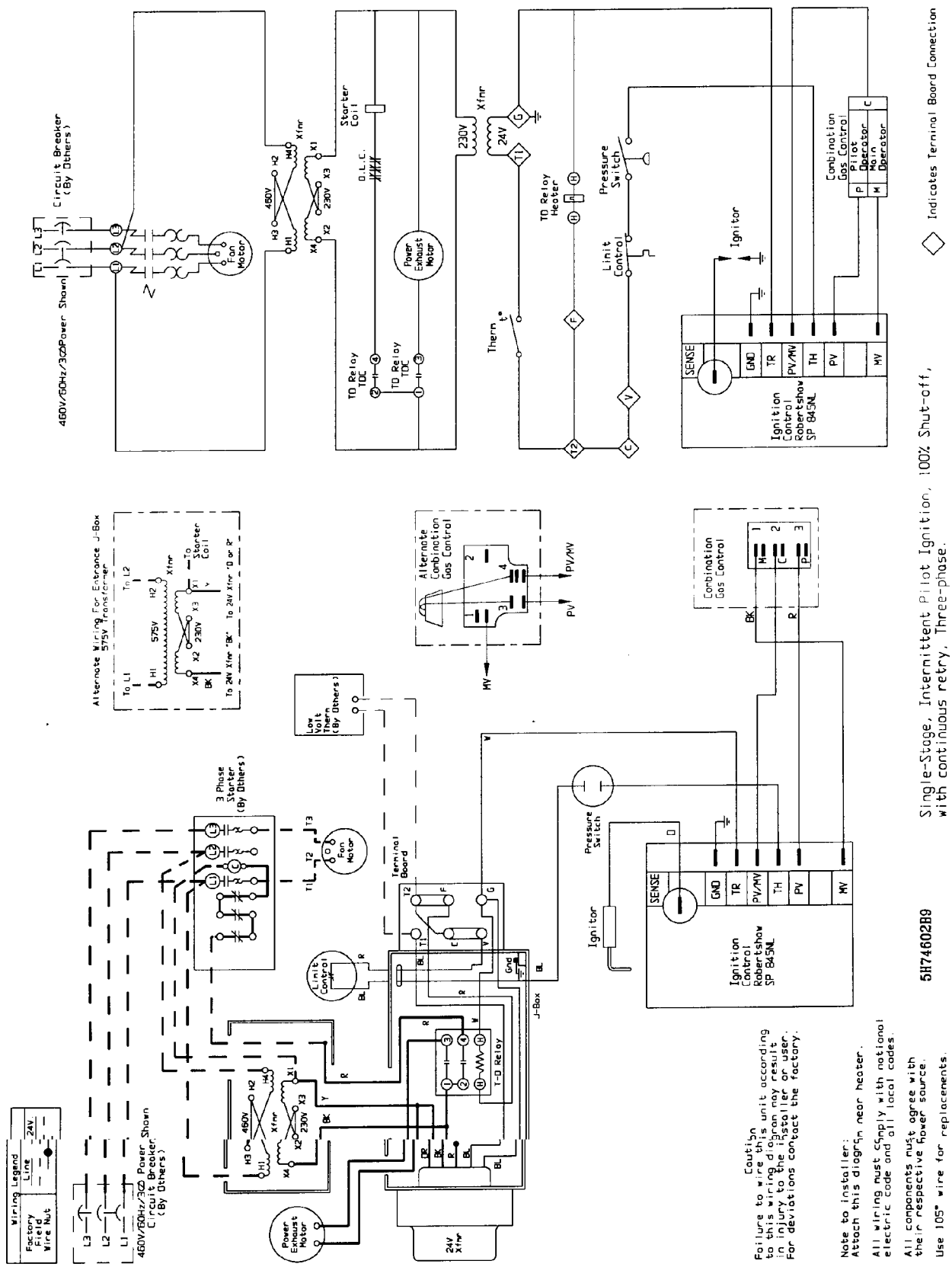

Three Phase — 5H74602B9

6-440.2 – WIRING DIAGRAMS MODELS PV/BV

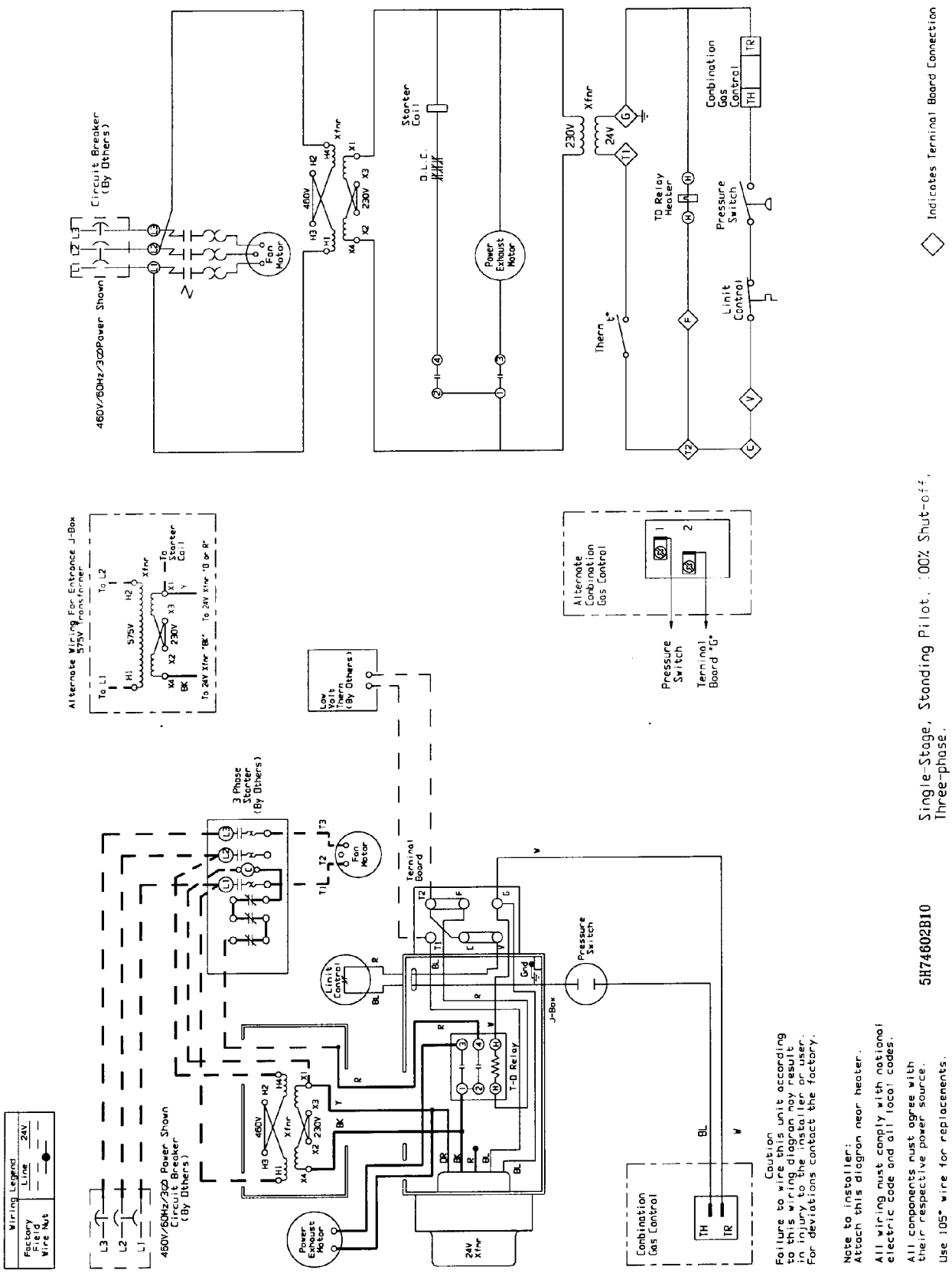

Three Phase — 5H74602B10

6-440.2 – WIRING DIAGRAMS MODELS PV/BV

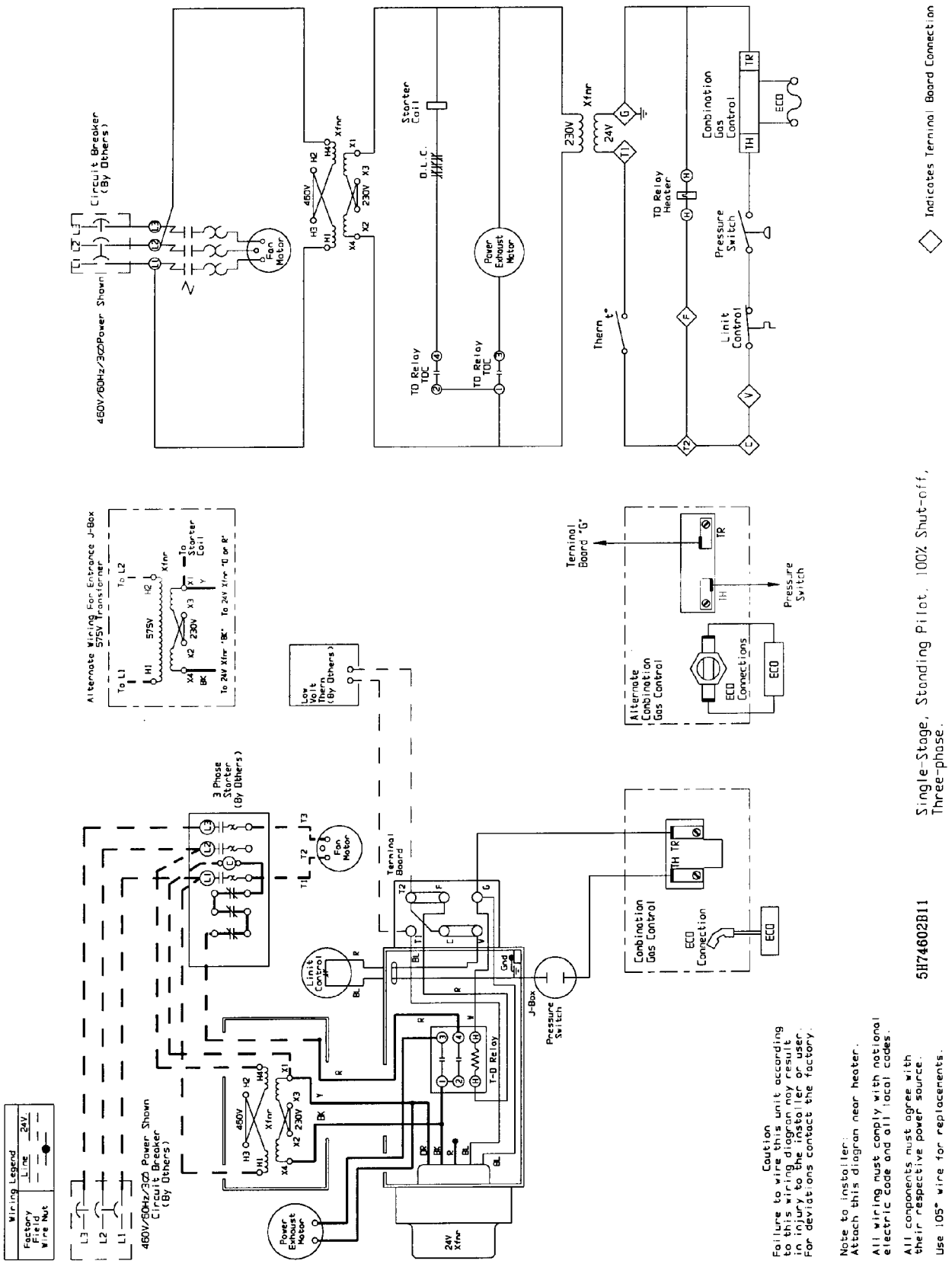

Three Phase — 5H74602B11

6-440.2 – WIRING DIAGRAMS MODELS PV/BV

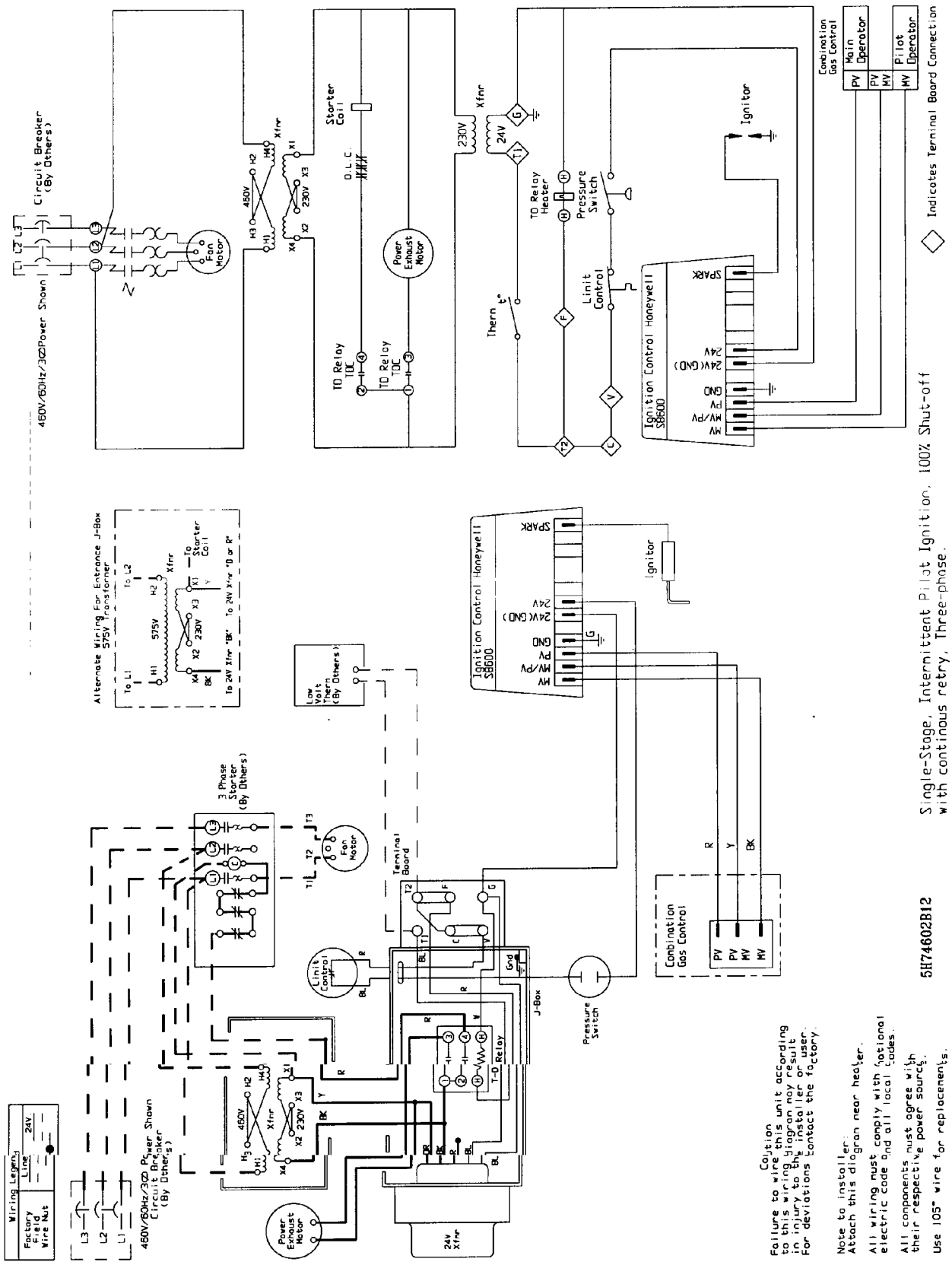

Three Phase — 5H74602B12

SUMMER/WINTER SWITCH WIRING - MODELS PV/BV

CAUTION

Turn off al power to gas to unit before wiring. Failure to wire this unit according to this wiring diagram may result in injury to the installer or user. For deviations, contact factory.

Before proceeding with wiring the accessories described, make sure the unit has been installed, vented, piped, and wired according to the Installation/Service Manual and Standard Wiring Diagram furnished with this unit heater.

Figure 1

Typical Wiring – Summer/Winter Switch (Modine # 78727)
(24v Thermostat, 115v or 200/230v Summer/Winter Switch)

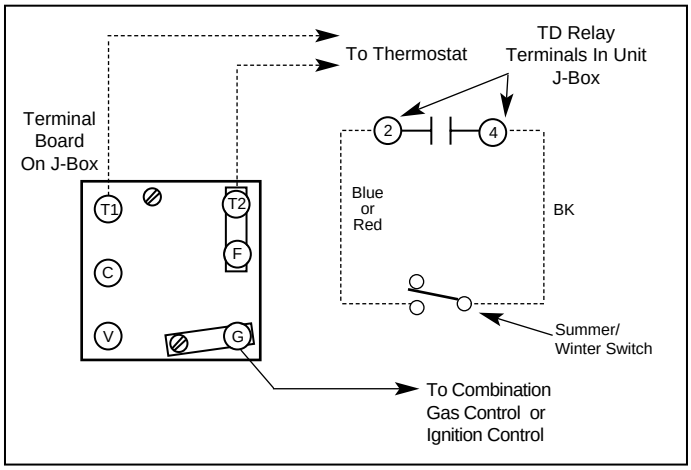

Figure 2

Typical Wiring – Summer/Winter Switch (Modine # 78727)
(24v Thermostat, 24v Summer/Winter Switch)

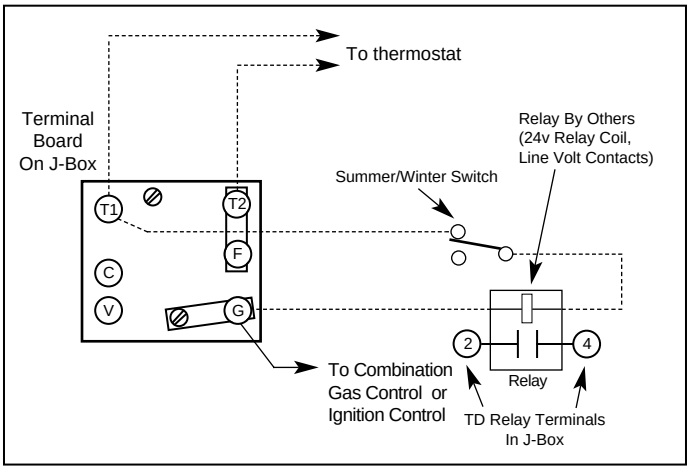

Figure 3

Alternate Wiring Using Robertshaw CM260 Thermostat w/SB-3A-1 Subbase
(25v Thermostat and Subbase)
(Modine #79187 and #78785 respectively)

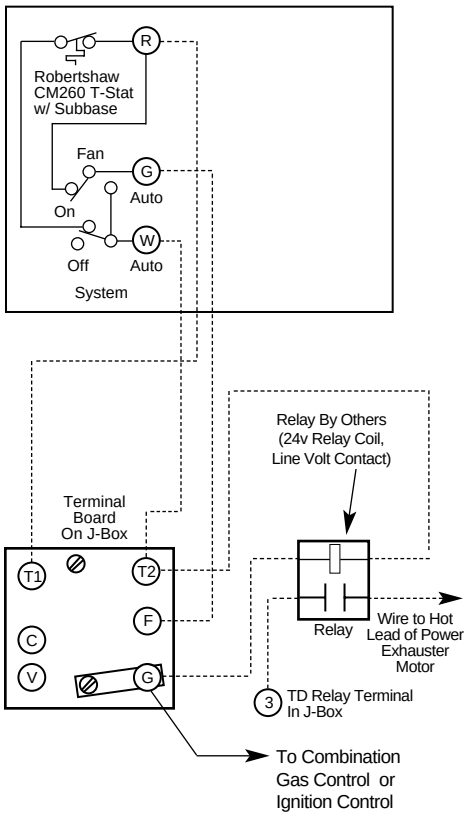

1. Turn off gas and power supply to unit.
2. Determine which method of summer/winter control is desired; Figure 1, 2 or 3.
3. Wire unit according to the method selected. **NOTE:** If the method selected is as described in Figure 3, the factory supplied buss bar between terminals “T2” and “F” must be removed prior to wiring in thermostat and subbase.
4. Check wiring using the Check-Out Procedure below.

Check-Out Procedure

With the power and gas supply turned off, set the thermostat to its lowest setting and place the summer/winter switch to the winter position. After making these adjustments proceed as follows:

1. Turn on gas and power supply to the unit. Nothing should happen.
2. Place the summer/winter switch in the summer position. The fan motor should start, except when wired as shown in Figure 3. In that case, after a delay of approximately 30 seconds, the fan motor should start.
3. While the summer/winter switch is still in the summer position, and with the fan motor running, turn the thermostat up to call for heat. The main burner should now fire. Allow burner to fire for 1 to 2 minutes.
4. Turn the thermostat down again. The main burner should shut off and the fan motor should continue to run. During this step, allow the fan to run at least 1-1/2 minutes to make sure it will continue running. Modine units are equipped with a time delay relay and the motor will run approximately 1 to 1-1/2 minutes after the time delay relay has been de-energized.
5. After insuring that the fan motor will continue to run in the summer position, and with the thermostat set to its lowest setting, place the summer/winter switch in the winter position and wait for the time delay relay to turn the fan motor off.
6. After the fan motor has stopped, and with the summer/winter switch in the winter position, turn the thermostat up to call for heat. The main burner should fire and after a delay of approximately 30 seconds, the fan motor should run.

If the above sequence of operation does not occur, recheck all wiring until the necessary correction to the wiring is found and corrected. Set the thermostat to the desired set point and place summer/winter switch in desired position. Unit is now ready for use.

SUMMER/WINTER SWITCH WIRING - MODELS PV/BV

Energy-Saver Kit Wiring

Power Exhausted, Propeller and Blower Models - Single and Three phase.

NOTE: Energy saver accessory wiring diagram is to be used in conjunction with unit wiring diagram.

CAUTION

Turn off all power and gas to unit before wiring. Failure to wire this unit according to this wiring diagram may result in injury to the installer or user. For deviations, contact factory.

Before proceeding with wiring the accessories described, make sure the unit has been installed, vented, piped and wired according to the Installation/Service Manual and Standard Wiring Diagram furnished with the unit heater.

Installation

All wiring for this control must comply with the National Electric Code and all local codes and ordinances.

Do not locate control on an outside wall or where it will be affected by drafts or radiant heat. It does not require level mounting.

1. Remove front cover and one wiring access knockout from control.
2. Attach control to mounting surface with three screws through back of case. Use a wooden shim for insulation if surface is metal or masonry.
3. Thread two wires through knockout and connect to R and W control terminals. Leads must be long enough to extend to unit heater junction box.
4. Disconnect power to unit heater and open junction box on unit heater. Select correct wiring diagram for unit heater model (and size if applicable) and complete wiring of control to unit.

Operational Check

1. Set room thermostat to its lowest setting and restore power supply to unit heater.
2. Familiarize yourself with the adjustment knob of the energy-saver control. In step 5 you will want to set it at 3-6 degrees (approximately) above the thermostat, but for now, turning the dial clockwise to a lower setting simulates a rise in temperature and only the unit heater fan should come on. If the wiring is correct, the controlled equipment will switch on and off as the temperature dial indicates the approximate space temperature.
3. If the controlled equipment does not start and stop as the thermostat dial is turned, disconnect the power supply and check the wiring and terminal connections.
4. If the controlled equipment operates opposite to the sequence desired, shut off the power and check for reversed leads on the switch.
5. After checkout, reset room thermostat to desired comfort level. Set energy-saver control 3 to 6 degrees above room thermostat (depending on mounting height, room conditions, etc.) for ceiling air circulation.

Wiring Instructions

1. Turn off power to unit heater.
2. Connect “R” of Energy Saver to terminal 2 of time delay relay.
3. Connect “W” of Energy Saver to terminal 4 of time delay relay.

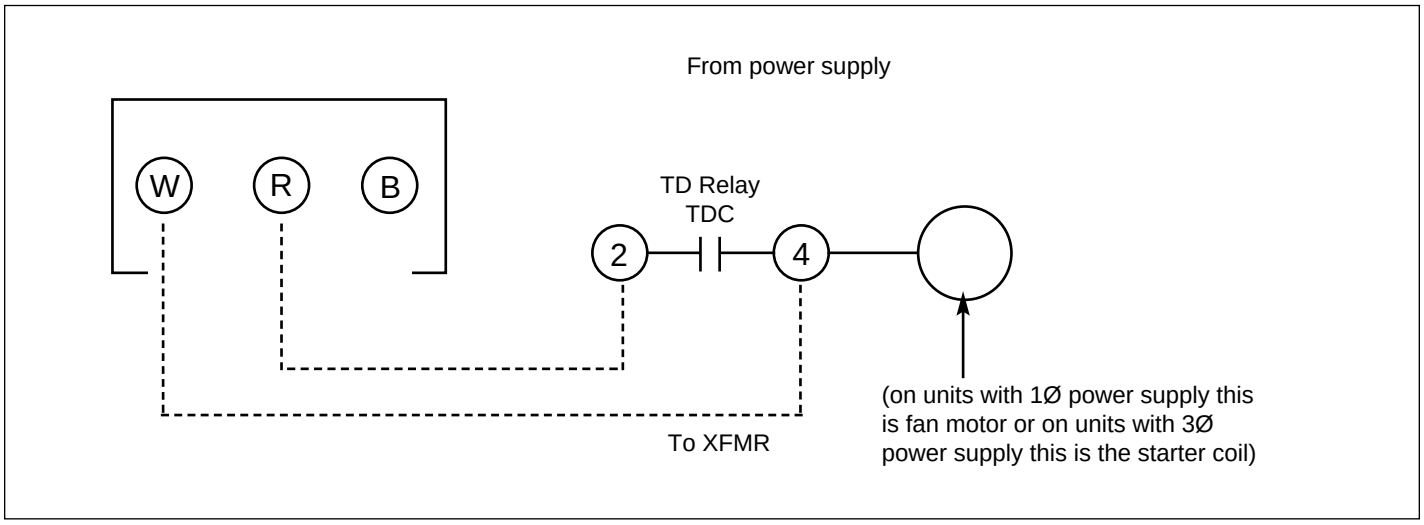

For local parts and service assistance, contact one of the following:

Sales Representatives

ALABAMA
Watts Engr. Sales
Birmingham, AL
(205) 871-4673

ALASKA
Heating & Vent. Sales
Anchorage, AK
(907) 345-3483

ARIZONA
Climatec, Inc.
Phoenix, AZ
(602) 944-3330

ARKANSAS
John Lynn Co., Inc.
North Little Rock, AR
(501) 771-4343

CALIFORNIA
A/C Specialties
LaHabra, CA
(562) 694-8543

Envir. Indus. Prod.
Mountain View, CA
(415) 964-6161

COLORADO
MJM Associates
Denver, CO
(303) 790-7000

CONNECTICUT
E.W. Leonard, Inc.
Moodus, CT
(860) 873-8691

DISTRICT OF COLUMBIA
Unicon Services, Inc.
Vienna, VA
(703) 255-5569

FLORIDA
T.H. Brooks
Apopka, FL
(407) 886-8405

T.H. Brooks
Tampa, FL
(813) 622-7000

Aeromechanical, Inc.
Gulf Breeze, FL
(904) 932-2011

GEORGIA
Herring Company, Inc.
Norcross, GA
(770) 416-0044

IDAHO
A.A. Maycock
Salt Lake City, UT
(801) 364-1926

ILLINOIS
John A. Sandberg Co.
East Moline, IL
(309) 796-2371

Fleming Hanson Sales
Downers Grove, IL
(630) 829-4060

Burden-Cooper, Inc.
Rockford, IL
(815) 633-6555

INDIANA
Jay Kress Assoc.
Indianapolis, IN
(317) 251-2498

IOWA
Capitol Rep & Distr.
Des Moines, IA
(515) 266-0844

KANSAS
Jorban Riscoe Assoc.
Kansas City, KS
(913) 722-1244

Jorban Riscoe Assoc.
Lenexa, KS
(913) 438-1244

KENTUCKY
Climate Conditioning
Louisville, KY
(502) 267-4696

LOUISIANA
Schully Strawn
Metairie, LA
(504) 831-0000

MAINE
Emerson-Swan, Inc.
Randolph, MA
(617) 986-2000

MARYLAND
Marva Sales, Inc.
Baltimore, MD 21217
(410) 945-0171

MASSACHUSETTS
Emerson-Swan, Inc.
Randolph, MA
(617) 986-2000

E.W. Leonard, Inc.
Moodus, CT
(203) 873-8691

MICHIGAN
Raley Brothers
Grand Rapids, MI
(616) 742-0150

Christian & Co., Inc.
West Bloomfield, MI
(248) 851-5660

MINNESOTA
Walters-Climate, Inc.
Minneapolis, MN
(612) 544-8626

MISSISSIPPI
Ward Mechanical
Jackson, MS
(601) 956-3002

MISSOURI
Evans, Maille
St. Louis, MO
(314) 822-1023

MONTANA
Vemco, Inc.
Billings, MT
(406) 248-8373

Vemco, Inc.
Missoula, MT
(406) 549-6113

NEBRASKA
B.G. Peterson Co.
Omaha, NE
(402) 344-4311

NEVADA
John A. Sandberg Co.
Las Vegas, NV
(702) 367-1657

NEW HAMPSHIRE
Emerson-Swan, Inc.
Randolph, MA
(617) 986-2000

NEW JERSEY
C.R. Hutcheon, Inc.
Bloomfield, NJ
(201) 743-9770

NEW MEXICO
TK Marketing
Corrales, NM
(505) 898-4804

NEW YORK
Emerson-Swan, Inc.
East Greenbush, NY
(518) 435-9900

Emerson-Swan, Inc.
Buffalo, NY
(716) 668-1403

Emerson-Swan, Inc.
Central Square, NY
(315) 668-7476

Wales-Darby, Inc.
Ronkonkoma, NY
(516) 585-6800

NORTH CAROLINA
L.R. Gorrell Co.
Asheville, NC
(704) 253-1856

L.R. Gorrell Co.
Charlotte, NC
(704) 333-8436

L.R. Gorrell Co.
Greensboro, NC
(910)373-1281

L.R. Gorrell Co.
Raleigh, NC
(919) 821-1161

NORTH DAKOTA
Walters-Climate, Inc.
Minneapolis, MN
(612) 544-8626

OHIO
R.G. Anderson Co.,
Cincinnati, OH
(513) 527-2300

Mussun Sales, Inc.
Cleveland, OH
(216) 431-5088

Mussun Sales, Inc.
Columbus, OH
(614) 294-4822

Stoermer Equipment
Dayton, OH
(937) 275-5007

Toledo Thermal
Toledo, OH
(419) 475-7100

OKLAHOMA
A.M.E., Inc.
Oklahoma City, OK
(405) 843-9788

OREGON
Canby Sales
Boring, OR
(503) 658-8346

PENNSYLVANIA
H & H Associates
Mechanicsburg, PA
(717) 796-2401

B.J. Terroni
Bensalem, PA
(215) 639-3600

Charles W. Stanger
Allison Park, PA
(412) 492-9220

RHODE ISLAND
Emerson-Swan, Inc.
Randolph, MA
(617) 986-2000

SOUTH CAROLINA
L.R. Gorrell Co.
Greenville, SC
(864) 297-7810

L.R. Gorrell Co.
Charleston, SC 29418
(803) 824-9449

SOUTH DAKOTA
Walters-Climate, Inc.
Minneapolis, MN
(612) 544-8626

Vemco, Inc.
Rapid City, SD
(605) 394-5790

TENNESSEE
Mech. & Indus. Sales
Gallaway, TN
(901) 867-0435

Charles F. Sexton Co.
Knoxville, TN
(423) 588-9691

Aircon Sales Agency
Nashville, TN
(615) 292-5555

TEXAS
SWK. Inc.
Dallas, TX
(214) 351-9985

Barnhart-Taylor
El Paso, TX
(915) 533-1231

Paschal-Harper, Inc.
San Antonio, TX
(210) 494-5493

UTAH
A.A. Maycock Co.
Salt Lake City, UT
(801) 364-1926

VERMONT
E.W. Leonard, Inc.
Moodus, CT
(203) 873-8691

VIRGINIA
L.A. Prillaman Co.
Richmond, VA
(804) 798-1455

WASHINGTON
Canby Sales
Bellevue, WA
(425) 867-3110

WEST VIRGINIA
Marva Sales, Unicon
Troutville, VA
(540) 992-4620

WISCONSIN
C & S Hydronics, Inc.
Delafield, WI
(414) 646-6325

WYOMING
Vemco, Inc.
Billings, MT
(406) 248-8373

MJM Associates
Englewood, CO
(303) 790-7000

Long & Associates.
Englewood, CO
(303) 922-6660

A.A. Maycock Co.
Salt Lake City, UT
(801) 364-1926

Canadian Sales Outlets

ALBERTA
Kehoe Equipment Co.
Edmonton, Alberta
(403) 420-0040

Summit Engineering Sales
Calgary, Alberta
(403) 250-9780

BRITISH COLUMBIA
Dierks Equipment Sales
Vancouver, BC
(604) 872-7891

MANITOBA
D.M. Industrial, Ltd.
Winnipeg, Manitoba
(204) 694-8637

NOVA SCOTIA
MacLeod and Grant, Ltd.
Stellarton, NS
(902) 752-5532

ONTARIO
Michael Stuart Company, Ltd.
Concord, Ontario
(905) 738-6008

Kemo Products, Ltd.
Thunder Bay, Ontario
(807) 622-3311

QUEBEC
G. Mitchell Heating & A/C
St. Laurent, Quebec
(514) 332-8929

SASKATCHEWAN
Cypress Sales
Regina, Saskatchewan
(306) 757-5656

Cypress Sales
Saskatoon, Saskatchewan
(306) 242-3333

Parts Wholesalers

CONNECTICUT
E.W. Leonard, Inc.
Moodus, CT
(860) 873-8691

COLORADO
MJM Associates
Englewood, CO
(303) 790-7000

GEORGIA
Herring Company, Inc.
Norcross, GA
(770) 416-0044

ILLINOIS
Heinlein Supply.
Chicago, IL
(773) 774-8616

KANSAS
Jorban Riscoe Assoc.
Kansas City, KS
(913) 722-1244

MARYLAND
Marva Sales
Baltimore, MD
(410) 945-0171

MASSACHUSETTS
Emerson-Swan, Inc.
Randolph, MA
(617) 986-2000

MICHIGAN
Christian & Co.
West Bloomfield, MI
(810) 851-5660

Raley Brothers
Grand Rapids, MI
(616) 742-0150

MINNESOTA
Walters Climate, Inc.
Minneapolis, MN
(612) 544-8626

MONTANA
Vemco, Inc.
Great Falls, MT
(406) 727-5335

NEW JERSEY
C.R. Hutcheon, Inc.
Bloomfield, NJ
(201) 743-9770

NEW YORK
ABCO Supply
Middle Village, NY
(718) 497-5245

H.C. Oswald Co.
New York, NY
(212) 722-7000

OHIO
Wolff Bros. Sply, Inc.
Medina, OH
(330) 725-3451

Toledo Thermal Equip. Co.
Toledo, OH
(419) 475-7100

PENNSYLVANIA
B.J. Terroni Co., Inc.
Bensalem, PA
(215) 639-3600

Myers Distributing Co., Inc.
Duquesne, PA
(412) 469-1010

H & H Associates
Mechanicsburg, PA
(717) 796-2401

TENNESSEE
A. T. Distributors
Memphis, TN
(901) 388-4118

TEXAS
K. Sales, Inc.
Dallas, TX
(972) 484-8885

UTAH
A.A. Maycock Company
Salt Lake City, UT
(801) 364-1926

VIRGINIA
L.A. Prillaman Co., Inc.
Ashland, VA
(804) 798-1455

WASHINGTON, DC
Marva Sales
Leesburg, VA
(540) 338-2009

WISCONSIN
C & S Hydronics, Inc.
Delafield, WI
(414) 646-6325

For service contact your local qualified installation and service contractor or appropriate utility company.

MODINE

Heating Division
Modine Manufacturing Company
1221 Magnolia Avenue
Buena Vista, Virginia 24416
Phone: 1-800-828-4328 (HEAT)
Fax: 540-261-1563
Fax: 540-261-1903 (Service & Parts)

© Modine Manufacturing Company 1997

12/97 - 1.5M Litho in USA